FORMULA RENAULT 2.0

Spare Parts Book

Reference: 7711166999
Date: 06/07/2015

RENAULT SPORT

RENAULT

WARRANTY

- Competition do not carry any specific contractual warranty

- Moreover, we would like to point out that the fitting of RenaultSport competition parts to RENAULT cars may render them illegal for use on public highways.

- RENAULT SPORT parts intended for competition use could modify the standard specification of road vehicules, as specified by the component authorities governing the technical roadworthiness of vehicules ("mines"). This applies to factors such as noise, pollution, tyre sizes, performance, etc.

Notes

- Competition parts cannot be retourned or exchanged.

- Pricing of parts distributed by RENAULT SPORT is reviewed periodically. Please refer to the date of the part prices catalogue.

PARTS ALPHABATIC INDEX

	Description	Boards
«	« NEC » catalytic converter	19.50
1	®1/2 coquille inf. capteur débat	32.00
	®1/2 coquille sup. capteur débat	32.00
A	®Accelerator pedal	37.00
	Accessory belt	16.00
	Ackermann spacer 3	33.40
	Ackermann spacer 3mm	33.40
	Actuator	38.00
	Actuator axle link	21.40
		38.00
	Actuator bearing retaining plate	38.00
	Actuator mounting kit	38.00
	Actuator mounting screw	38.00
	Adaptateur etrier PFC	37.80
	Adaptateur MC frein	37.02
	Adaptator	12.50
		17.00
		19.30
	Additional steering column support	36.00
	Adjustable clamp 11-19	19.30
	Advance shim th. 3.05	21.30
	Advance shim th. 3.10	21.30
	Advance shim th. 3.15	21.30
	Advance shim th. 3.20	21.30
	Advance shim th. 3.25	21.30
	Advance shim th. 3.30	21.30
	Advance shim th. 3.35	21.30
	Advance shim th. 3.40	21.30
	Advance shim th. 3.45	21.30
	Advance shim th. 3.50	21.30
	Advance shim th. 3.55	21.30
	Advance shim th. 3.60	21.30
	Advance shim th. 3.65	21.30
	Advance shim th. 3.70	21.30
	Advance shim th. 3.75	21.30
	Advance shim th. 3.80	21.30
	Advance shim th. 3.85	21.30
	Advance shim th. 3.90	21.30
	Advance shim th. 3.95	21.30
	Advance shim th. 4.00	21.30
	Advance shim th. 4.05	21.30
	Advance shim th. 4.10	21.30
	Advance shim th. 4.15	21.30
	Advance shim th. 4.20	21.30
	Advance shim th. 4.25	21.30
	Advance shim th. 4.30	21.30
	®Air box	13.50
	Air breather adapter M10x100	21.10
	Air breather valve	19.30
	Air filter	13.50
	®Air filter support	13.50
	Air intake aluminium pipe	12.00

	Description	Boards
	Air intake manifold bracket	12.00
	Air intake pipe bracket	12.00
	Air pressure sensor	17.00
	Alternator	16.00
	ALternator bracket	16.00
	Alternator bracket spacer	16.00
	Anneau invérsé Ø30	31.00
		33.00
	Arretoir extincteur	90.00
	Attache cable teflon	88.00
	Axe porte moyeu AV evo	31.40
	Axle lip seal	38.00
B	Bache à huile nue "évo"	21.15
	Bague de pignon de crémaillère	36.01
	Ballast 1Kg	57.00
	Ballast 2.5Kg	57.00
	Ball bearing	21.50
	Ball bearing 6004	21.40
	Ball bearing 6005	21.40
	Banjo bolt	20.00
	Banjo MC frein	37.02
	Banjo screw	37.80
	Barrel assembled	21.40
	Barrel kit	21.40
	Barrel potentiometer	21.40
	Battery	80.00
	Battery charge loom	88.00
	Battery charge plug	80.00
	Battery spacer	80.00
	Bearing	10.60
		10.70
		32.00
		36.01
		38.00
	Bearing 6003	21.40
	Bearing inner race NU-1007	21.20
	Bearing NU-1007 ECP	21.20
	Bearing NU207 ECP	21.30
	Bearing NU-2205	21.20
	Bearing plate NU207 "origine"	21.30
	Bearing QJ207 C2	21.30
	Bearing spacer 6.30mm	34.00
	Bearing spacer 6.35mm	34.00
	Bearing spacer 6.40mm	34.00
	Belleville axle	32.00
	Belleville cage ép:4.2	21.50
	Belleville cage ép:4.3	21.50
	Belleville cage ép:4.4	21.50
	®Bellevilles adjustment nut	32.00
		32.00
		36.01
	Belleville washer F=0.8	21.50

	Description	Boards
	Belleville washer F=1	21.50
	belleville washers	32.00
	Bevel gear 9x30	21.30
		21.50
	BHS Bolt M4-8 cl:10.9	41.00
	BHS Bolt M5-12	13.50
		43.00
		90.00
	BHS Bolt M5-16	37.01
	BHS Bolt M5-20	41.00
		41.50
	BHS Bolt M8-20 cl:10.9	40.00
	BHS Bolt M8-25	41.50
	BHS Bolt M8-45	38.50
	Biellette capteur accélérateur	37.01
	Blanking plug	12.00
	Blanking plug Ø10	12.00
	Bol de Disque PFC	31.40
		33.40
	®Bonnet	40.50
	Boot mounting	29.00
	Bouchon bache à huile	21.15
	Bouchon vase expension	19.00
	Bouchon vortex	22.00
	Bouteille support extincteur	90.00
	Bouton poussoir de vidange	88.00
	Brake balance bar	37.00
	Brake balance bar bush	37.00
	®Brake balance bracket	37.00
	Brake balance bracket axle	37.00
	®Brake pedal	37.00
	®Brake pedal pad	37.00
	Brake pedal spacer	37.00
	Brake pressure sensor	37.80
	Brake pump reservoir	37.01
		37.02
	Brake reservoir bellow	37.01
		37.02
	Bras de rétro évo	56.20
	Breather pipe	19.00
		22.00
	Bush for needle bearing K40x45x13	21.30
	Button head socket screw M10-50	21.15
	Button head socket screw M5-16	13.50
		41.00
		41.50
		80.00
	Button head socket screw M8-10	17.00
C	Cablage Capteur push AR	88.00
	Cablage Capteur push AV	88.00
	Cable balance frein	83.00
	®Cache distribution plastique	10.00

PARTS ALPHABATIC INDEX

Description	Boards
Cale arretoir extincteur	90.00
®Caliper spacer	31.40
	33.40
Camshaft position sensor	17.00
Camshaft position sensor «evo2 loom»	17.00
CAN end	88.00
Cap M18x150	21.10
Capteur pression essence "évo2"	19.30
Capteur pression huile "évo2"	17.00
Capteur Tair	13.50
®Catch tank bonnet	22.00
Centreur d'embrayage	21.90
®Chape inf triangle AR	33.00
®Chape sup triangle AR	33.00
Chassis loom « evo2 »	88.00
CHS Bolt 5/16 1"1/4	37.00
	37.01
CHS Bolt 5/16 2"1/4	37.00
CHS Bolt 5/16x1"	37.01
CHS Bolt M10-130	16.00
	21.15
CHS Bolt M10-25 cl:12.9	16.00
CHS Bolt M10-40	19.80
CHS Bolt M10-50	19.80
	21.15
	31.00
CHS Bolt M10-60	19.80
	21.15
CHS Bolt M10x150-20	11.00
CHS Bolt M10x150-35	16.00
	21.15
CHS Bolt M10x30 cl.12.9 ZN	21.10
CHS Bolt M10x40 cl.12.9 ZN	21.10
CHS Bolt M10x45 cl.12.9 ZN	21.10
CHS Bolt M4x16 cl.8.8 Bichro	21.40
CHS Bolt M5-10	34.00
CHS Bolt M5-12	83.00
	42.10
CHS Bolt M5-12 cl:12.9	19.30
	32.00
CHS Bolt M5-15	19.30
	22.00
	32.00
CHS Bolt M5-20 cl:12.9	32.00
	34.00
CHS Bolt M5-20 cl:8.8 Zn	16.10
CHS Bolt M5x10 cl8.8 ZN	21.50
CHS Bolt M5x12 ZN Cl 10.9	21.40
CHS Bolt M5x25 cl.8	29.00
CHS Bolt M6-12 cl:12.9	34.00
CHS Bolt M6-16	17.00
	21.15

Description	Boards
CHS Bolt M6-18 cl:12.9	38.00
CHS Bolt M6-20	10.80
	11.00
	21.40
	32.00
	37.01
	41.00
	80.00
CHS Bolt M6-25 cl:12.9	38.50
CHS Bolt M6-25 Tb	31.40
	33.40
CHS Bolt M6-30	16.00
CHS Bolt M6-35 cl:12.9	17.00
	37.00
	37.01
CHS Bolt M6-45 cl:12.9	11.00
CHS Bolt M6-55	11.00
CHS Bolt M6 -55 cl10.9	36.00
CHS Bolt M6-70 cl:12.9	37.01
CHS Bolt M6 lg25 Cl8.8 Zn	21.40
CHS Bolt M6x12 cl.10	16.10
CHS Bolt M6x15	10.80
	40.10
CHS Bolt M7-75 fix pare pierre	16.00
CHS Bolt M7x100-25	20.00
CHS Bolt M7x16 cl 10.9 brut zn	21.40
CHS Bolt M8-20	10.70
	16.00
	34.00
CHS Bolt M8-25	33.00
	34.00
	41.50
CHS Bolt M8-25 cl:10.9	10.70
CHS Bolt M8-35 cl.12.9	33.40
	35.00
CHS Bolt M8-50 cl:12.9	31.40
	36.00
CHS Bolt M8-50 cl:12.9 (recoupé)	31.00
CHS Bolt M8-60 Cl:12.9	32.00
CHS Bolt M8-65 cl:12	37.00
CHS Bolt M8-70 cl:12.9	36.00
CHS Bolt M8-90 cl:12.9	37.00
CHS Bolt M8x125-30	31.00
	34.00
	37.00
	40.00
	41.00
	41.50
	59.20
CHS Bolt M8x125-40 CL 12.9	16.00
	19.80
	20.00

Description	Boards
	37.00
CHS Bolt M8x20 cl12.9	21.30
CHS Bolt M8x25 cl.12.9 ZN	21.10
Circlip Int Nomel 42x44.5x1.75	36.00
Circlips	21.30
	36.01
Circlips-ext. Ø28	21.20
	21.30
Circlips-ext. Ø6 axe ressort	37.01
Circlips-Exterior ø20mm	21.40
Circlips-Interior Ø47	21.10
Circlips Ø24	29.00
Circlip Ø15	35.00
Circlip Ø28	37.00
Clamp	19.00
Clamp Ø12	19.00
Clamp Ø16	10.70
	19.00
	22.00
Clamp Ø32	19.00
Clapet de bache	22.00
Clip fix. bol de Disque PFC	31.40
	33.40
Clips int Ø32	10.70
Closing plate	21.10
Clutch bleed screw	20.00
Clutch line to brake pump	20.00
Clutch mechanism	20.00
®Clutch pedal	37.00
Clutch pedal pad	37.00
Clutch pedal rod end	37.00
	37.01
Clutch shaft	21.20
Clutch thrust bearing	20.00
Coil	17.00
®Coil horizontal bracket	17.00
Coil loom	17.00
Coil support mounting spacer	17.00
®Coil vertical bracket	17.00
Collar screw	12.00
	12.50
	17.00
Collar screw Hexagonal M6-12	12.00
Collar screw H M6-15 cl:8.8	11.00
Collar screw H M6-20 cl:8.8	11.00
Collier serrage Ø16-27	22.00
Collier serrage Ø30-45	19.30
Complete boot mounting	29.00
Complete flange	29.00
Complete fork	21.40
Complete lower rocker	21.40
®Complete lower steering column	36.00

PARTS ALPHABATIC INDEX

	Description	Boards
	Complete oil pump stainer	10.80
	Complete reverse gear pinion	21.40
	Complete upper rocker	21.40
	Conical washer	19.50
	Conical washer Ø 5.2	83.00
		41.00
	Conical washer Ø6 x19 x4	37.01
	Connector	41.50
	Connector ring	38.00
	Coolant breather adapter	11.00
	Coolant circuit adapter	11.00
	Coolant outlet housing	11.00
	Coolant swirl pot adapter	19.00
	Copper washer	37.02
	Copper washer 10x14x1	20.00
		37.02
		37.80
	Copper washer Ø12x18 ép:2	12.50
	Copper washer Ø14x20 ép:1mm	17.00
	Copper washer Ø5	22.00
	Coque	40.00
	Countergear bearing	36.01
	Coupleur bocal frein "femelle"	37.02
	Coupleur bocal frein "male"	37.02
	Coupleur prélèvement essence	12.50
	®Couteau barre anti-roulis AR 5mm	34.00
	®Couteau barre anti-roulis AR 7mm	34.00
	Crankshaft pulley	10.60
	Crankshaft sensor loom	17.00
		88.00
D	Damper potentiometer	32.00
		34.00
	Dash adapter 3	10.80
		17.00
	Datalogger AV mounts kit	80.00
	Demi arbre coté D	21.90
	Demi arbre coté G	21.90
	®Dérive AVD	41.00
	®Dérive AVG	41.00
	®Dérive de diffuseur AR	42.10
	Differential cover plate	21.50
	Differential pinion shaft	21.50
	Differential plate set (70°/65°)	21.50
	®Diffuser	42.10
	Disc-Smooth	20.00
	Disque D PFC	31.40
		33.40
	Disque friction 1	20.00
	Disque friction 2	20.00
	Disque G PFC	31.40
		33.40
	Double lip seal Ø17xØ35x7	21.40

	Description	Boards
	Double ratchet	21.40
	Douille d'écrou de primaire	21.90
	Douille d'écrou de secondaire	21.90
	Douille serrage axe evo porte moyeu AV	99.00
	Dowel	10.70
		21.15
	Dowel pin	38.00
	Dowel pin Ø14x12 Lg:15	21.10
	Download lead	88.00
	Drive peg retaining tool	99.00
	Drive peg socket	99.00
	Drivershaft joint	29.00
		33.40
	®Driveshaft	29.00
	Driveshaft preload spring	29.00
		33.40
	Driveshaft stop	29.00
	®Droop screws rear bracket	34.00
	®Drop link	34.00
	Dual pin rock pusher	21.40
	Dual pin rock pusher kit	21.40
	Dual rocker spring	21.40
	Durite Ø32 à 90° Lg : 150x150	19.00
E	®Ecope radia D	43.00
	®Ecope radia G	43.00
	®Ecran thermique démarreur	16.10
	Ecrou à riveter Ø5	42.10
	Ecrou FIHE M10	21.15
	Ecrou fix. nez	40.00
	Ecrou fix lest AV	57.00
	Ecrou Knut M10x125	31.40
		33.40
	®ECU	17.00
	ECU retaining o-ring	17.00
	Emergency clutch lever	38.50
	Emergency clutch lever knob	38.50
	Emergency lever spacer	38.50
	Emergency neutral cable	37.01
		38.50
	Empty catalytic converter	19.50
	®Engine cover	43.00
	®Engine in aluminium pipe	19.00
	®Engine inlet coolant pipe	11.00
	Engine mounting chassi bush	40.10
	Engine outlet coolant pipe	19.00
	Engine speed sensor	17.00
	Engine wiring harness 2015	88.00
	Entretoise cable sécurité AV	31.00
		35.00
	Entretoise chape inf triangle AR	33.00
	Entretoise chape sup triangle AR	33.00
	Entretoise Omega	80.00

	Description	Boards
	Entretoise roulement / poulie palier pompe à huile	10.70
	Entretoise support CBNT	80.00
	®Etrave	40.50
	Etrier ARD PFC	33.40
	Etrier ARG PFC	33.40
	Etrier AVD PFC	31.40
	Etrier AVG PFC	31.40
	®Exhaust bracket	19.50
	Exhaust collar	19.50
	Exhaust intermediate line	19.50
	Exhaust manifold	19.50
	Exhaust retaining spring	19.50
	Exhaust spacer	19.50
	®# Extinguisher command box loom	88.00
	Extinguisher pipe	90.00
F	Faisceau excitation démarreur	88.00
	Faisceau puissance démarreur	88.00
	Faisceau volant evo2013	36.00
	FHS Bolt M10-100	57.00
	FHS Bolt M5-10	32.00
		41.50
		80.00
	FHS Bolt M5-15	41.00
	FHS Bolt M5-20	37.00
		42.00
	FHS Bolt M5-35	83.00
	FHS Bolt M5-40	37.00
	FHS Bolt M5x12 cl.10.9	21.15
	FHS Bolt M5x16 cl.10	29.00
	FHS Bolt M6-15	19.30
		31.40
		37.00
		57.00
		41.50
	FHS Bolt M6-20	37.01
		42.00
	FHS Bolt M6x16 cl.10.9	21.15
	FHS Bolt M8-16 cl:10.9	19.50
	FHS Bolt M8-30	19.50
	Filling cap seal	19.30
		21.10
	Filter gauze	10.80
	Fixation D tirant sur BV	21.40
		42.10
	Fixation G tirant sur BV	21.40
		42.10
	®FL Ackermann	31.40
	Flange NU207 "fin" ép:3.66	21.30
	Flexible coupling	10.70
	Flexible mounting	17.00
	®FL flap gurney	41.00

PARTS ALPHABATIC INDEX

Description	Boards
®Flywheel	10.60
Flywheel screw	10.60
®Foot rest	37.00
Fork rod	21.40
®FR Ackermann	31.40
Frète de carter	21.10
®FR flap gurney	41.00
Friction disc ep1.75mm	21.50
Front axle rocker axle washer	32.00
Front brake line to brake pump	37.80
Front brake line to calipers	37.80
Front damper	32.00
®Front damper bracket	32.00
	40.00
Front damper canister support	32.00
Front damper potentiometer support	32.00
Front droop screw	32.00
®Front hub axle	31.40
Front hub screw	31.40
Front lower wishbone bearing bush	31.00
®Front lower wishbone front bracket	31.00
	33.00
	35.00
®Front lower wishbone rear bracket	31.00
®Front pushrod	31.00
®front rocker	32.00
Front rocker aluminium spacer 3mm	32.00
Front rocker aluminium spacer 5mm	32.00
Front rocker aluminium spacer 8mm	32.00
®Front rocker axle	32.00
Front rocker axle nut	32.00
Front rocker bearing	32.00
Front rocker nut tool	99.00
Front rocker plate	32.00
®Front rocker push plate	32.00
®Front top wishbone	31.00
Front top wishbone bearing bush	31.00
®Front top wishbone bracket	31.00
®Front upright with bearing	31.40
®Front wheel hub	31.40
	33.40
®Front wheel speed trigger	31.40
Front wheel tether	35.00
®Front Wing	41.00
Fuel cap	19.30
®Fuel cell	19.30
Fuel filling pipe	19.30
Fuel filling tube support	19.30
Fuel filter	19.30
Fuel filter plastic washer	19.30
Fuel filter support	19.30
Fuel injector	12.50

Description	Boards
Fuel pipe (coupling to fuel rail)	12.50
Fuel pipe (Fuel tank to coupling)	12.50
Fuel pressure regulator support	19.30
Fuel pump loom	19.30
Fuel pump mounting collar	19.30
Fuel pump o-ring	19.30
Fuel pump top protection	19.30
®Fuel rail	12.50
Fuel rail cap	12.50
Fuel rail holder	12.00
Fuel tank top seal	19.30
®Fuel tower	19.30
Fusebox loom	88.00
G Gaitor	29.00
GB actuator spring	38.00
®GCU Powerbox	38.00
Gearbox	21.00
Gearbox actuator	38.00
Gearbox actuator axle washer	38.00
Gearbox actuator support	38.00
Gearbox air breather pipe	22.00
Gearbox oil HTX755	08.00
Gearbox rear housing	21.10
Gear lever	21.40
Gear ratio 1 (12x32)	21.20
	21.30
Gear ratio 2 (12x24)	21.20
	21.30
Gear ratio 3 (14x23)	21.20
	21.30
Gear ratio 4 (16x22)	21.20
	21.30
Gear ratio 5 (16x19)	21.20
	21.30
Gear ratio 6 (26x28)	21.20
	21.30
Gear ratio 7 (21x20)	21.20
	21.30
Gear ratio 7 (24x24)	21.20
	21.30
Goupille arrêt	31.40
	33.40
Goupilles de fixation	19.50
Goupille tour de cou	40.50
®Gravel protection	16.00
Gravel protection support	16.00
Grease	29.00
Grille D de radia	43.00
Grille G de radia	43.00
Ground loom	88.00
Grub screw	34.00
H Hanger	17.00

Description	Boards
	80.00
H Bolt M10-25	16.00
H Bolt M10x100 lg.16 cl 12.9	21.50
H Bolt M8-35	34.00
H Bolt M8x20 cl.10	16.10
®headrest	40.50
H nut-Thin M12	37.01
Hose	19.30
Hose Ø12	19.00
Hose Ø16	19.00
Hose Ø32	19.00
Hose Ø32 coude à 90°	19.00
Hose Ø70 lg:50mm	13.50
Housing-limited slip differential	21.50
Huile Moteur 5W40 (5litres) ELF excelium	08.00
I Indexor spring	21.40
Inferior fuel filling tube	19.30
Inner race NU207	21.30
Insert support moteur supérieur	19.80
Internal snap ring Ø16	21.40
Internal snap ring Ø20	37.01
Internal snap ring Ø31	10.80
Internal snap ring Ø35	19.30
	21.10
	21.40
	32.00
Internal snap ring Ø85mm	21.50
J Jeu de cales (de 3.05 à 3.30mm)	21.30
Jeu de cales (de 3.75 à 4.00mm)	21.30
Joint de roulement de roue	31.40
	33.40
Joint de vidange	21.10
	21.15
Joint papier	12.00
Joint vortex viton 75x1.5	22.00
Jump battery loom	88.00
K Kit butée de plaquettes PFC	31.40
	33.40
Kit Goujons + ecrous étrier frein PFC	31.40
	33.40
Kit insert de vis de purge PFC	31.40
	33.40
Kit joints butée embrayage	20.00
Kit joints isolation pistons PFC	31.40
	33.40
Kit joints piston PFC	31.40
	33.40
Kit outil révision butée d'embrayage	20.00
Kit piston PFC	31.40
	33.40
Kit protections pistons PFC	31.40
	33.40

PARTS ALPHABATIC INDEX

	Description	Boards
	Kit soufflet coté roue	29.00
	Kit vis de purge PFC	31.40
		33.40
	K needle bearing 40x45x13	21.30
L	Lambda probe	17.00
	Languette alu	40.50
	Lap beacon transmitter	88.00
	®Left threaded front hub axle	31.40
	®Left threaded rear hub axle	33.40
	Left threaded rod end	34.00
	Left threaded wheel nut	31.40
		33.40
	Lest AV 5mm	57.00
	®LH engine frame	19.80
	LH fishplate	41.50
	®LH floor	42.00
	®LH floor stay Lg:375	42.10
	®LH Front flap	41.00
	®LH Front lower wishbone	31.00
	®LH front rocker mounting	32.00
	®LH Front wing endplate	41.50
	LH oil tank stay bracket	42.10
	®LH pedalbox support	37.00
	®LH Rear BAR support	34.00
	LH Rear damper	34.00
	LH Rear damper potentiometer support	34.00
	®LH Rear lower wishbone	33.00
	®LH sidepod	43.00
	®# Lifeline extinguisher double loom	88.00
	Lipseal 85x105x12	21.50
	Lipseal Ø28x47x7	21.10
	Lip seal Ø8x18x5	21.40
	Liquide de frein	08.00
	Liquide de Frein Castrol SRF	08.00
	Liquide de frein PFC	08.00
	Locknut 1/4	31.40
		33.00
		36.00
	Locknut 12PH135M	34.00
	Locknut 3/8 UNF	33.00
	Locknut 5/16	31.00
		31.40
		32.00
		33.00
		33.40
		34.00
		36.00
		37.00
		37.01
	Locknut 7/16	31.40
		33.40
	Locknut M5	13.50

	Description	Boards
		16.00
		19.30
		32.00
		34.00
		37.01
		41.00
		41.50
		42.10
	Locknut M6	16.00
		17.00
		34.00
		37.00
		37.01
		38.50
	Locknut M8	33.40
		37.00
		41.50
	Lock washer	21.20
		21.30
	Lock washer RB20	21.20
	Long + battery loom	88.00
		80.00
	®Long pushrod adjuster	33.00
	Lubrifiant de montage	20.00
M	Main casing	21.10
	Manchon droit Ø16 lg:85	22.00
	Manifold lower seal	12.00
	®Master Cylinder Ø14 (noir/orange)	37.01
	®Master Cylinder Ø15.9 (noir) 0.625	37.01
	®Master Cylinder Ø15 (noir/rouge)	37.01
	Master Relay	80.00
	Master Switch "électrique"	83.00
	Master Switch "mécanique"	83.00
	Master Switch loom	88.00
	Modin	10.70
	Modin aluminium pipe	19.00
	Modin to radiator pipe	10.70
		19.00
	Moteur complet avec capteurs Evo	10.00
	Moulding Ø10xØ12xlg10	21.15
	Moulding Ø8xØ10x10	21.10
	Moulding Ø8xØ6x6	21.10
	®Mounting bracket-ECU	17.00
	Mousse cale reservoir gros G	19.30
	mousse reservoir pentagone D	19.30
	mousse reservoir petit AR	19.30
N	NAS bolt 1104-13	31.00
	NAS bolt 1104-14	32.00
	NAS bolt 1105-27	32.00
	NAS bolt 1304-11	36.00
	NAS bolt 1304-12	31.40
		33.00

Description	Boards
	36.00
NAS bolt 1304-16	33.00
NAS bolt 1304-17	36.00
NAS bolt 1304-19	31.00
NAS bolt 1305-14	31.00
	33.00
NAS bolt 1305-16	31.00
	31.40
	36.00
NAS bolt 1305-17	33.00
	33.40
NAS bolt 1305-18	32.00
	34.00
NAS bolt 1305-22	34.00
NAS bolt 1306-18	33.00
NAS bolt 6604-22	36.00
NAS S washer 1/4	32.00
NAS S washer 5/16	32.00
	33.40
NAS T washer 1/4	31.00
	31.40
	33.00
	36.00
NAS T washer 3/8	31.40
	33.00
	33.40
NAS T washer 5/16	31.00
	31.40
	33.00
	33.40
	34.00
	37.00
	37.01
Needle roller bearing HK2016	21.40
NGK R sparkplug	17.00
®Nosebox	40.50
®Nose tip	40.50
Nut	32.00
	33.00
	34.00
	36.01
Nut (LH thread)	34.00
nut H M5	37.00
nut H M6	34.00
	37.01
nut H M8	32.00
	34.00
Nut HM8 Nylon	38.50
nut HM M10x100 Zn	21.40
	38.00
Nut M10	34.00
Nut M6	19.00

PARTS ALPHABATIC INDEX

	Description	Boards
		80.00
	Nut Nylstop M10	16.00
		19.80
		40.10
	Nut-SIMMONDS M10x125	21.10
	Nut-SIMMONDS M5	13.50
		42.10
		80.00
	Nut-SIMMONDS M6	21.40
	Nut stop	32.00
	Nut-Thin 1/2 "pas à Gauche"	31.00
		33.00
	Nut-Thin 3/8	31.00
		33.00
		36.00
	Nut-Thin 7/16	33.00
	Nut-underneath HM8	19.50
	Nut with floating washer M5	19.00
	Nylon spacer	36.01
O	Oil filter	10.70
	Oil filter mounting	10.70
	Oil pipe	10.80
	Oil pipe (pump to swirl pot)	10.80
	Oil pipe to swirl pot retainer	10.80
	Oil pressure sensor	17.00
	Oil pressure sensor 2015	17.00
	Oil pressure sensor pipe	17.00
	Oil pump bearing 6002 2rs1	10.70
	Oil pump bearing axle	10.70
	Oil pump bearing support	10.70
	Oil pump drive	10.70
	®Oil pump pulley	10.70
	Oil pump retainer	10.80
	Oil pump stainer clamp	10.80
	Oil pump stainer cover plate	10.80
	®Oil pump stainer housing	10.80
	Oil pump stainer seal Ø34x2.5	10.80
	Oil sump bush	19.80
	Oil sump long mounting stud	40.10
	Oil sump short mounting stud	40.10
	Oil tank bottom plate	21.15
	Oil tank bush	19.80
		21.15
	Oil tank level kit	21.15
	Oil tank lower filtration plate	21.15
	Oil tank swirl pot to	10.80
	oil tank top filtration plate	21.15
	®Omega datalogger	80.00
	Omega datalogger 2 écrous	19.80
	Optional damper potentiometer	32.00
		34.00
	O ring	11.00

	Description	Boards
		17.00
		38.00
	O ring-Nitrile Ø29x3	21.10
	O ring Ø10x2.5	21.40
	O ring Ø12x3	36.00
	O ring Ø16x2	21.40
	O ring Ø18x2.5	21.15
		36.00
	O ring Ø20x2.5 vortex	10.80
	O-ring Ø22x2.5	10.80
	O ring Ø2x113	21.15
	O ring Ø2x230	21.15
	O ring Ø2x26	21.40
	O ring Ø2x36	21.40
	O ring Ø2x74	21.15
	O ring Ø2xØ109	21.50
	O ring Ø30x2	19.30
	O ring Ø3x305	21.10
	O ring Ø67.6x2.4	21.30
	O ring Ø75xØ3.5	80.00
	O ring Ø86x3	29.00
	Outer hub washer	31.40
		33.40
	Outillage de controle de selection	21.90
P	PAP Permaglide bush 1515 P10	21.40
	®Pare pierre embrayage	10.00
	Pedalbox long adjuster	37.01
	Pedalbox lower plate	37.00
	®Pedalbox main plate	37.01
	Pedalbox short adjuster	37.01
	Pedalbox stop	37.01
	Pedal bush	37.00
	Pedal spacer	37.00
	Pedal spacer Ø12 ép:0.5mm	37.00
	Pedal spacer Ø12 ép:1mm	37.00
	Peigne à fourchettes	21.90
	Permaglide bush	21.10
	PI dongle	88.00
	Pignon de renvoi	36.01
	Pinion bearing	36.01
	Pin Ø2.5x18	21.40
	Pion AR tour de cou	40.00
	Pion fix AV tour de cou	40.00
	Pion siège extractible	40.00
	Pitot sensor	88.00
	Pivot pin-Reverse lever	21.40
	Plain washer Ø6xØ121.2	10.80
		16.00
		17.00
		19.00
		37.00
		37.01

	Description	Boards
		38.50
		40.10
		41.00
		41.50
	®Planche AR	42.00
	®Planche AV	42.00
	®Planche centrale	42.00
	Planet gear	21.50
	Plaque anti-écartement	21.90
	Plaque de montage de boite	21.90
	®Plaque fermeture boite à air	13.50
	Plaque fermeture chassis sup	40.00
	®Plaque fermeture ECU	42.00
	®Plaque fermeture reservoir	40.10
	Plaque fix. tour de cou	40.50
	®Plaque fix batterie	80.00
	Plaque plastique fermeture support aile AV	41.00
	Plaque support lest AV	57.00
	Plaque translucide fermeture reservoir	40.00
	Plaquettes PFC 11	31.40
		33.40
	Plaquettes PFC 13	31.40
		33.40
	Plastic cap	32.00
	Plastic HEX screw M6-10	80.00
	Plastic ring	36.01
	Plateau presseur	20.00
	Platine de pédalier "grand pilote V2"	37.00
	®Pointe de plancher D	42.00
	®Pointe de plancher G	42.00
	Pompe à essence cablée	19.30
	®Porte moyeu ARD assemblé	33.40
	®Porte moyeu ARG assemblé	33.40
	®Porte moyeu AVD assemblé	31.40
	Potentiometer axle	21.40
	Potentiometer axle bush	21.40
	Potentiometer support	21.40
	Power loom	88.00
	Pressure regulator 3,5 bars	19.30
	Pressure sensor	19.30
	Primary shaft cap	21.20
	Primary shaft nut	21.20
	Pulley fixing screw	10.60
	Push	31.00
		33.00
R	Raccord vortex	22.00
	Rack	36.00
	Radial bearing Ø8	21.40
	Radiator in aluminium pipe	19.00
	Rain light	41.50
	Rain light silentblox	41.50
	Rain light support	41.50

PARTS ALPHABATIC INDEX

Description	Boards
®RARB	34.00
RARB bearing	34.00
RARB washer	34.00
reamer Ø15 (fourchette BV)	21.00
reamer Ø20 (fourchette BV)	21.00
Rear brake line to brake pump	37.80
Rear brake line to calipers	37.80
®Rear crashbox	41.50
®Rear damper bracket	34.00
Rear damper canister bracket	34.00
®Rear hub axle	33.40
Rear hub screw	33.40
Rear inferior wishbone rod end	33.00
®Rear lower mainplaine	41.50
Rear lower wishbone bracket spacer	33.00
®Rear pushrod	33.00
®rear rocker	34.00
®Rear rocker axle	34.00
Rear rocker axle tool	99.00
Rear rocker bearing	34.00
®Rear rocker cover plate	34.00
Rear rocker mounting tube	99.00
Rear rocker nut	99.00
Rear rocker o-ring	34.00
Rear rocker spacer	34.00
Rear rocker stud	34.00
®Rear rocker tool	99.00
Rear rocker tool cover plate	99.00
®Rear toe rod	33.00
®Rear top flap	41.50
®Rear top wing	41.50
®Rear top wishbone	33.00
®Rear upper flaps link	41.50
Rear upright axle évo2	33.40
Rear upright pin nut évo2	31.40
	33.40
®Rear upright with bearing	33.40
Rear wheel tether	35.00
Rear wheel tether mounting spacer	35.00
®Rear wheel tether retaining plate	35.00
®Rear wing floor stay	41.50
®Rear wing LH upper support	41.50
®Rear wing RH upper support	41.50
®Rear wing support	41.50
Rear wing support screw	41.50
Rear wing support spacer	41.50
Rear wishbone bracket pin	33.00
®Régleur de pince AR Evo	33.00
®Regleur de push AV long	31.00
®Renfort de coque	40.00
Repair kit-M/Cyl Ø0.625	37.01
Repair kit-M/Cyl Ø0.700	37.01

Description	Boards
Repair kit-M/Cyl Ø0.750	37.01
Rétro Evo D convexe	56.20
Rétro Evo D plat	56.20
Rétro Evo G convexe	56.20
Rétro Evo G plat	56.20
Reverse gear washer	21.40
Reverse gear wheel	21.30
®RH engine frame	19.80
RH fishplate	41.50
®RH floor	42.00
®RH floor stay Lg:395	42.10
®RH Front flap	41.00
®RH Front lower wishbone	31.00
®RH front rocker mounting	32.00
RH oil tank stay bracket	42.10
®RH pedalbox support	37.00
®RH Rear BAR support	34.00
RH Rear damper	34.00
RH Rear damper potentiometer support	34.00
®RH Rear lower wishbone	33.00
®RH Rear wing endplate	41.50
®RH sidepod	43.00
Rivet Ø3x8	17.00
	38.50
	80.00
®RL complete Ackermann	33.40
Rocker axle	21.40
Rod end bearing	31.00
	31.40
	33.00
	33.40
	34.00
Rod end spacer	31.00
Rod for emergency clutch cable	38.50
®Rollcage	40.00
Roll sensor	32.00
Roll sensor bracket	32.00
Roll sensor support	32.00
Rotation stopping fork	21.30
Roulement butée embrayage	20.00
®RR complete Ackermann	33.40
S Screw	10.00
	19.30
	21.40
	34.00
	83.00
	90.00
Screw AN4-14A	31.00
Screw CHC10-25	19.80
Screw Hc M6-8 pointeau	31.40
	33.40
Screw M4-10	80.00

Description	Boards
Screw RLX M5-12 cl:8.8	40.50
	42.10
	43.00
Screw TC M5-16 cl:10.9	19.30
Seal	11.00
	12.00
Sealing cord Ø3	21.10
Seal mounting plate	29.00
Seal plate	21.50
Seal Ø14x18.7 ép:1.5	12.50
	19.30
Seal Ø45x5x2	11.00
Seal Ø5	19.30
Seat belt	59.20
®Seat belt support	59.20
Secondary shaft nut	21.30
Seeger ring SB16	21.40
Selecting rod	21.40
Selector bolt	21.40
Selector closing block	21.40
Selector plug	21.10
Selector spring	21.40
Sensor bracket spacer	36.00
Shim 0.1mm	21.40
Shim 0.5mm	19.80
Shim 1mm	19.80
Shim 61x49x0.5	21.20
Shouldered bush	21.40
®Siège extractible	40.50
Silencer	19.50
Silencer internal replacement kit	19.50
Silentbloc	83.00
	80.00
Silentbloc 20x25 M6-16.5	17.00
Sliding ring	21.30
Small silentblox for coil Ø	17.00
Smooth bush	21.30
Smooth disc 1.75mm	21.50
Snap ring Ø17	21.40
Socket for rear lower upright axle	99.00
Socket HK1816	21.40
Solenoid	16.10
Spacer	34.00
	38.50
	41.50
Spacer 0.20 d'embout de crémaillère	36.01
Spacer 0.25 d'embout de crémaillère	36.01
Spacer 0.30 d'embout de crémaillère	36.01
Spacer 0.35 d'embout de crémaillère	36.01
Spacer 0.38 d'embout de crémaillère	36.01
Spacer 0.40 d'embout de crémaillère	36.01
Spacer 10mm câble d'embrayage	38.50

PARTS ALPHABATIC INDEX

Description	Boards
Spacer 15mm câble d'embrayage	38.50
Spacer 1 palier pompe à huile	10.70
Spacer 20mm câble d'embrayage	38.50
Spacer 2 palier pompe à huile	10.70
Spacer P1 pompe à huile	10.70
Spacer P2 pompe à huile	10.70
Spacer-Primary shaft	21.20
Spacer Ø19 ép:0.15mm	36.01
Spacer Ø19 ép:0.20mm	36.01
Spacer Ø19 ép:0.25mm	36.01
Spacer Ø19 ép:0.30mm	36.01
Spacer Ø19 ép:0.35mm	36.01
Spacer Ø19 ép:0.38mm	36.01
Spacer Ø32 ép:0.15mm	36.01
Spacer Ø32 ép:0.20mm	36.01
Spacer Ø32 ép:0.25mm	36.01
Spacer Ø32 ép:0.30mm	36.01
Spacer Ø32 ép:0.35mm	36.01
Spacer Ø32 ép:0.38mm	36.01
SPA extinguisher	90.00
SPA extinguisher double loom	88.00
SPA extinguisher simple loom 1(simple)	88.00
®SPA fire extinguisher command box	90.00
Spring 1000	34.00
Spring 700	32.00
Spring 800	32.00
	34.00
Spring 900	32.00
	34.00
starter motor	16.10
Starter motor bracket	16.10
Starter motor front support	16.10
Starter motor nut	16.10
Starter motor rear spacer	16.10
Steel collar	10.00
	12.50
	17.00
	19.00
Steel collar stud	19.00
Steering column bearing	36.00
Steering column concave washer	36.00
®Steering column support	36.00
®Steering potentiometer support	36.00
Steering rack bar	36.01
Steering rack end Belleville	36.01
Steering rack ends	36.00
	36.01
Steering rack pinion	36.01
Steering rack stop	36.01
Steering sensor	36.00
Steering sensor mounting spacer	36.00
®Steering tierod	36.00

Description	Boards
®Steering wheel adjuster	36.00
®Steering wheel evo2013	36.00
®Steering wheel hub	36.00
Stop NU2205	21.20
straight adaptor	12.50
Stud M10x125/lg90/M10x150	21.15
Sump plug- Magnetic insert	21.10
	21.15
Sun wheel	21.50
®Support aile AV	41.00
Support bocaux MC frein	37.02
®Support BV / Diffuseur	42.10
®Support capot moteur AR	43.00
®Support capot moteur inf	40.10
®Support capot moteur sup.	40.10
Support capteur T°air	13.50
®Support D de Flap AV "inox"	41.00
®Support G de Flap AV "inox"	41.00
®Support lest AR	57.00
Support nez	40.00
®Support pédalier	37.00
®Support pédalier gand pilote	37.00
®Support ponton	40.00
Support ponton / capot	43.00
Support power box	38.00
Support sup radia	19.00
Swirl pot	19.00
	22.00
Swirlpot breather pipe	19.00
Swirl pot intake pipe	10.80
Swirlpot silentbloc	19.00
Switch mounting	21.30
®Switchplate	83.00
Switchplate spacer	83.00
T Temperature sensor	11.00
	17.00
	21.15
Tensioner	10.70
Tensioner axle	10.70
Throttle body	12.00
Throttle body «evo2 loom»	12.00
Throttle body rubber spacer	12.00
Throttle body stud M6-54	12.00
®Throttle pedal pad	37.00
Throttle pedal pad spacer 10mm	37.00
Throttle pedal pad spacer 5mm	37.00
Throttle pedal potentiometer	37.01
Throttle pedal rod end	37.00
	37.01
	38.50
Throttle pedal spring axle	37.01
Throttle potentiometer axle	37.00

Description	Boards
®Throttle potentiometer bracket	37.01
Throttle spring	37.01
®Throttle spring casing	37.01
Throttle spring washer	37.01
Thrust washer	21.40
Tige fileté M6-30 cl:4.8	40.00
Timing belt closing plate	10.00
Timing belt thermalshield	10.00
®Tirant chassis / plancher	40.00
®Toc de roue Evo	31.40
	33.40
Tole protection distri inf assy	10.00
Tooth clearance shim th. 2.10	21.50
Tooth clearance shim th. 2.15	21.50
Tooth clearance shim th. 2.20	21.50
Tooth clearance shim th. 2.25	21.50
Tooth clearance shim th. 2.30	21.50
Tooth clearance shim th. 2.35	21.50
Tooth clearance shim th. 2.40	21.50
Tooth clearance shim th. 2.45	21.50
Tooth clearance shim th. 2.50	21.50
Tooth clearance shim th. 2.55	21.50
Tooth clearance shim th. 2.60	21.50
Tooth clearance shim th. 2.65	21.50
Tooth clearance shim th. 2.70	21.50
Tooth clearance shim th. 2.75	21.50
Tooth clearance shim th. 2.80	21.50
Tooth clearance shim th. 2.85	21.50
Tooth clearance shim th. 2.90	21.50
Tooth clearance shim th. 2.95	21.50
Tooth clearance shim th. 3.00	21.50
Tooth clearance shim th. 3.05	21.50
Tooth clearance shim th. 3.10	21.50
Tooth clearance shim th. 3.15	21.50
Tooth clearance shim th. 3.20	21.50
Tooth clearance shim th. 3.25	21.50
Tooth clearance shim th. 3.30	21.50
Tooth clearance shim th. 3.35	21.50
Tooth clearance shim th. 3.40	21.50
Top air intake manifold	12.00
®Top alternator support	16.00
Top closing plate	21.15
®Top engine beam	19.80
®Top fuel filling tube	19.30
T pour durite après vortex	22.00
Trapped nut M6	42.10
®Travel stop 1.5mm	31.40
®Travel stop 1mm	31.40
®Travel stop 2mm	31.40
	33.40
®Travel stop 3mm	31.40
®Travel stop 5mm	31.40

PARTS ALPHABATIC INDEX

	Description	Boards
		33.40
	Tripode	29.00
	Tripod grease	29.00
	Tuyau AR sur butée embrayage	20.00
	Tuyau bocal frein	37.02
	Tuyau de purge butée embrayage	20.00
U	UNF nut 1/4	31.00
	UNF nut 5/16	31.40
		33.40
		34.00
		37.00
		37.01
	®Upper steering column	36.00
	®Upright	31.40
		33.40
	®Upright-Front LH assembled	31.40
	Upright lower	31.40
		33.40
	®Upright pin bearing washer	31.40
		33.40
V	Valve équipée pour bouchon bache à huile	21.15
	Vee ring 28	29.00
	Venting adapter	21.10
	Venting pipe Ø8x14 lg:245	19.30
	Vis banjo MC frein	37.02
	Vis BHC emb. M5-12	13.50
		40.10
	Vis CBHC M5-10	16.10
		22.00
		41.00
	Vis CBHC M6-12	10.00
	Vis CBHC M6-16	38.50
		41.50
		80.00
	Vis CBHC M6-25	37.00
		41.00
	Vis CBHC Ø6 -10	17.00
	Vis H modifié moyeu / lobro	33.40
	Viton o-ring Ø66x1.5	12.00
	VVT solenoid valve	17.00
	VVT solenoid valve «evo2 loom»	17.00
W	Wall beacon	88.00
	Washer	12.00
		19.50
		19.80
		31.00
		34.00
		35.00
		38.50
		40.00
		40.10
		41.50

Description	Boards
Washer-Onduflex M6x12x0.5	37.00
Washer ONDUFLEX Ø5	13.50
	90.00
Washer Schnor Ø7	16.00
Washer SPS Ø10	16.00
	21.15
	38.50
Washer SPS Ø5	19.30
	32.00
	83.00
	90.00
Washer SPS Ø6	16.00
	19.30
	32.00
	36.00
	38.00
	38.50
	41.00
	80.00
Washer SPS Ø8	20.00
	31.40
	32.00
	33.00
	33.40
	34.00
	35.00
	36.00
	37.00
	41.00
	41.50
	59.20
Washer Ø10	16.00
Washer Ø5	13.50
	19.30
	22.00
	32.00
	34.00
	41.00
	41.50
	42.10
	43.00
Washer Ø6x14 ép:1,2	11.00
	34.00
Washer Ø6x20	40.10
	80.00
Washer Ø8xØ16x1.4	10.70
	16.00
	17.00
Water pipe in chassis	19.00
Water pump	11.00
Water pump seal	11.00
®Water radiator	19.00

	Description	Boards
	Wheel bearing	31.40
		33.40
	Wheelbearing mounting tool	99.00
	®Wheel bearing retaining plate	31.40
		33.40
	Wheel bearing shim	99.00
	Wheel Front	35.00
	Wheel nut	31.40
		33.40
	Wheel Rear	35.00
	Wheel speed sensor	31.40
	Wheeltether mounting axle	35.00
	®Windscreen	40.00
X	®XAP fusebox	80.00
	®XAP fusebox tray	80.00
Z	Zebra stainless collar Ø60-80	13.50

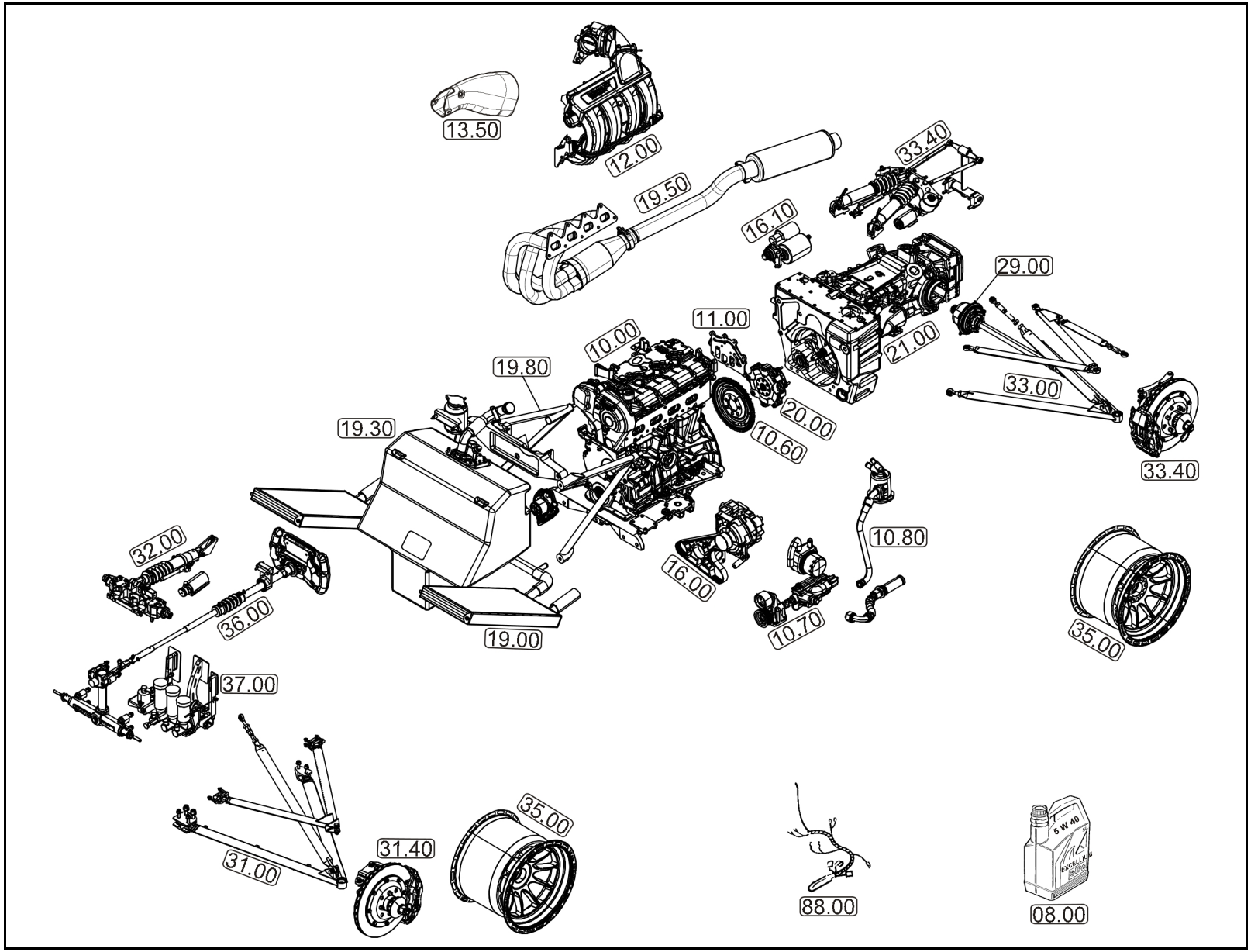
13.50
12.00
19.50
33.40
16.10
29.00
11.00
10.00
21.00
19.80
33.00
20.00
19.30
10.60
33.40
10.80
32.00
16.00
36.00
10.70
35.00
19.00
37.00
35.00
31.40
31.00
88.00
08.00

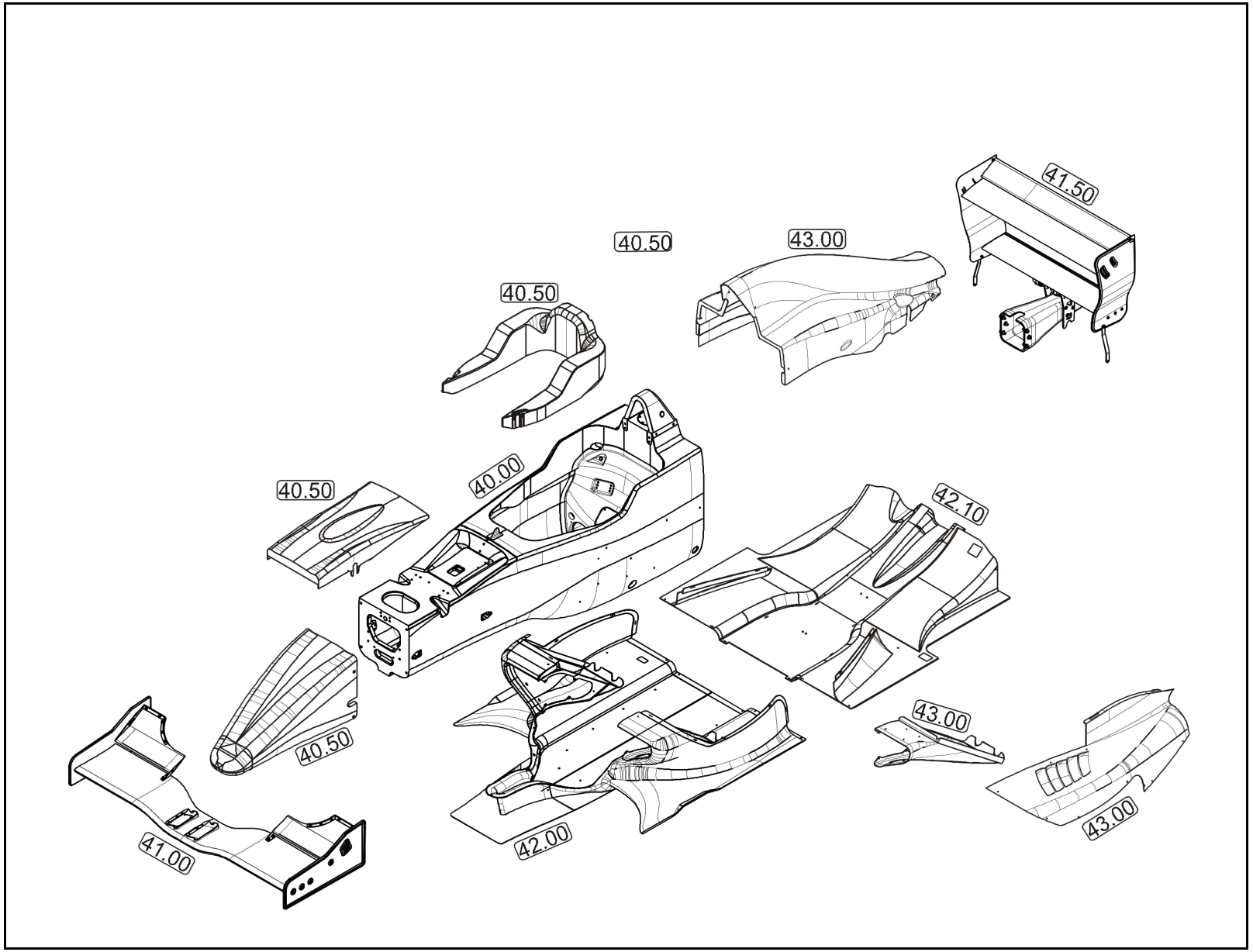

Bodywork - janv.-2013

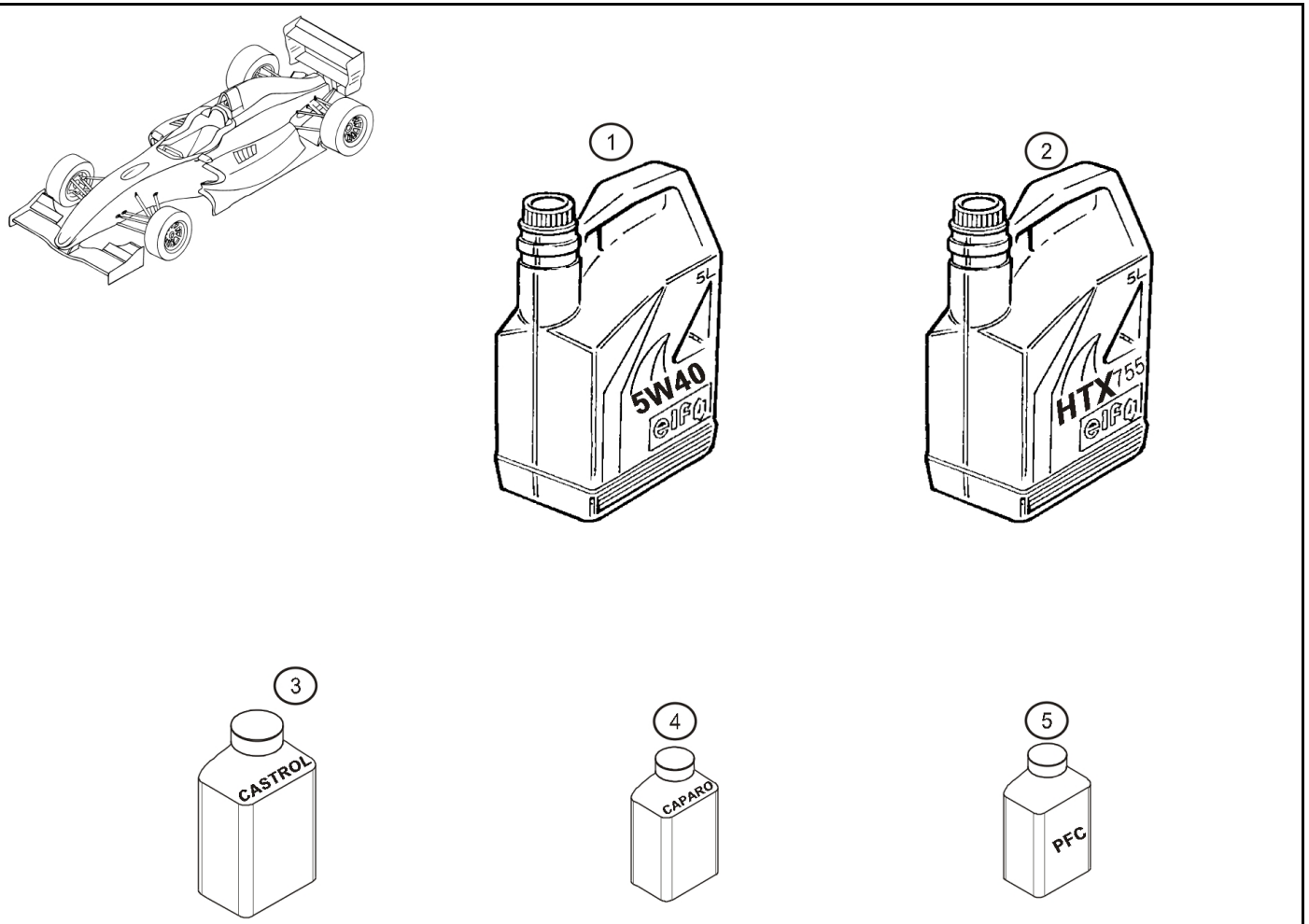

Rep.	Reference	Description	Coef
1	**77 11 166 390**	Huile Moteur 5W40 (5litres) ELF excelium	1
2	**77 11 158 892**	Gearbox oil HTX755	1
3	**77 11 162 609**	Liquide de Frein Castrol SRF	1
4	**77 11 166 127**	Liquide de frein	1
5	**77 11 166 919**	Liquide de frein PFC	1

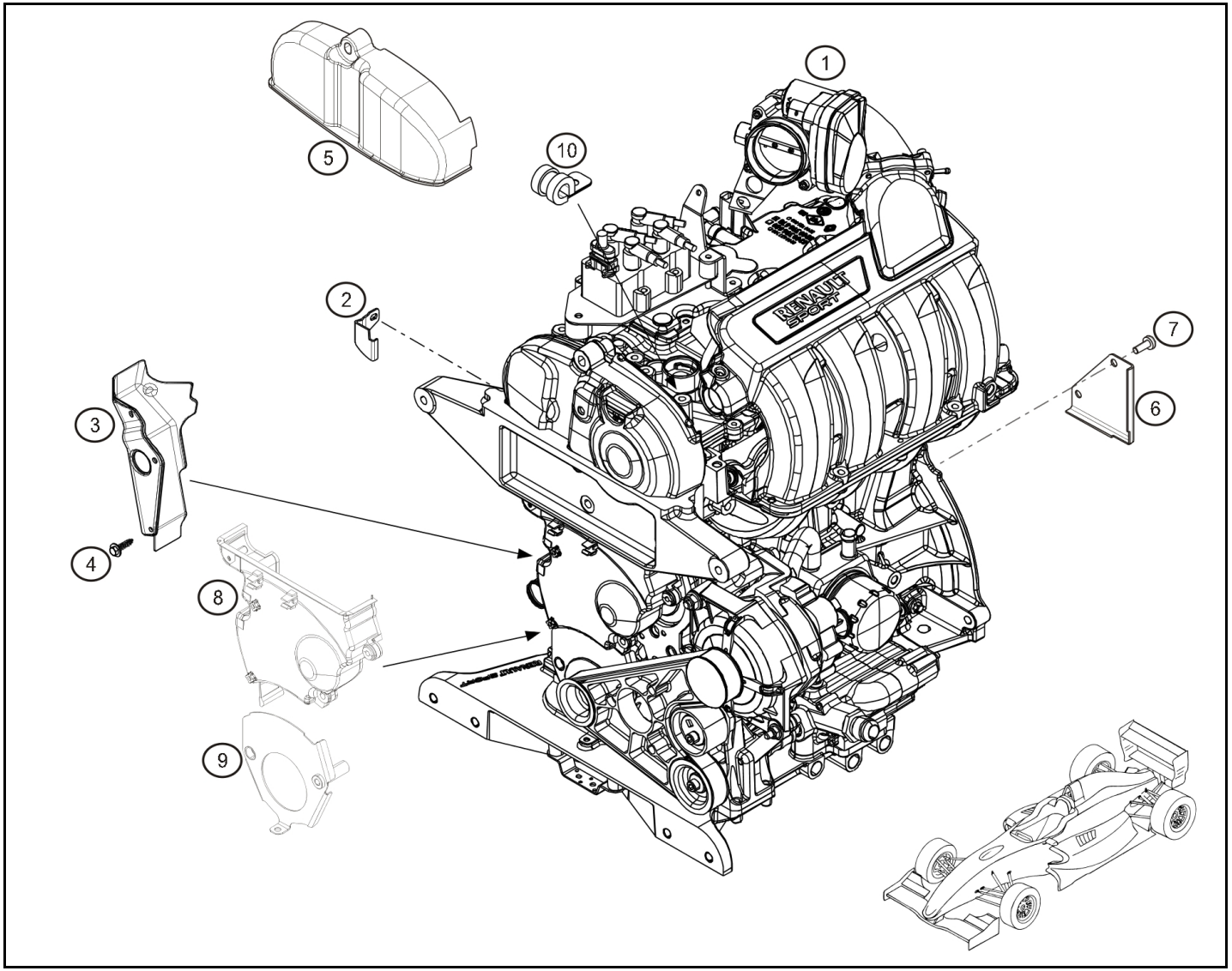

Rep.		Reference	Description	Coef
1		**77 11 166 758**	Moteur complet avec capteurs Evo	1
2		**77 11 166 440**	Timing belt closing plate	1
3		**77 11 166 687**	Timing belt thermalshield	1
4		**77 03 017 139**	Screw	3
5	®	**77 11 166 757**	Cache distribution plastique	1
6	®	**77 11 166 290**	Pare pierre embrayage	1
7		**77 11 129 246**	Vis CBHC M6-12	2
9		**77 11 166 056**	Tole protection distri inf assy	1
10		**77 03 005 265**	Steel collar	1

avr.-2015

RENAULT SPORT

RENAULT

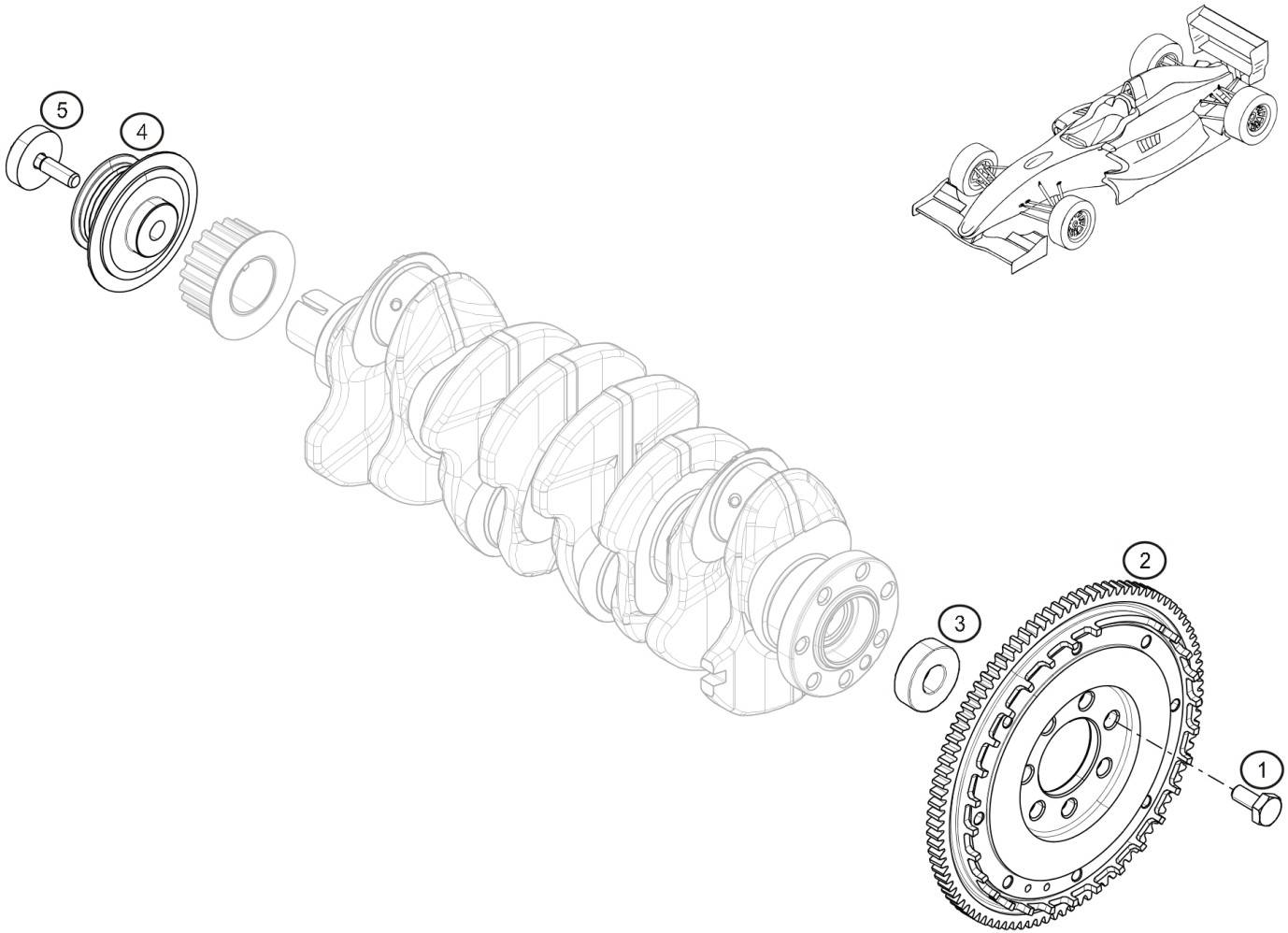

Rep.		Reference	Description	Coef
1		**77 11 154 202**	Flywheel screw	7
2	®	**77 11 166 003**	Flywheel	1
3		**77 03 090 115**	Bearing	1
4		**77 11 166 053**	Crankshaft pulley	1
5		**82 00 608 653**	Pulley fixing screw	1

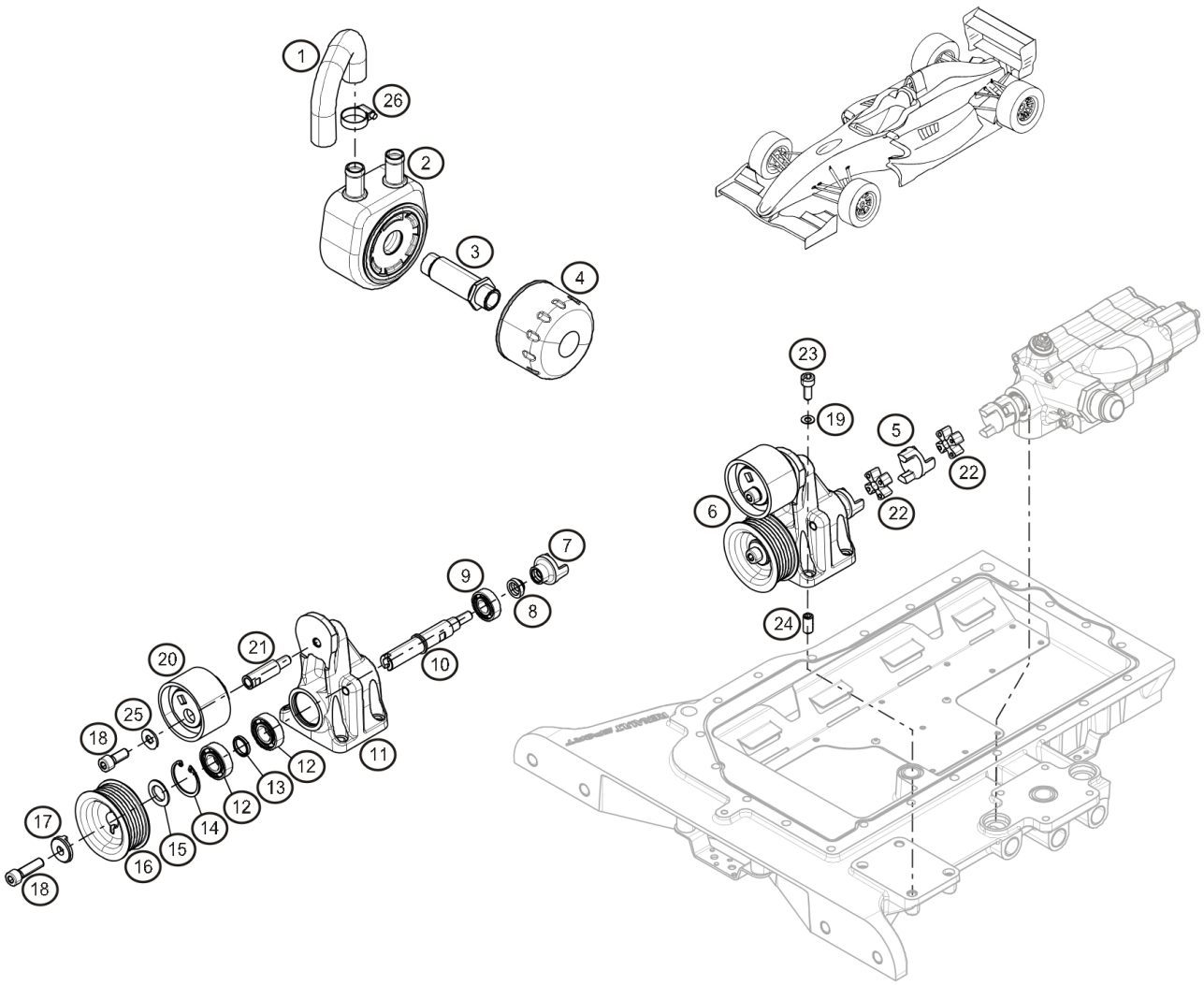

Rep.		Reference	Description	Coef
1		**77 11 154 249**	Modin to radiator pipe	1
2		**82 00 806 731**	Modin	1
3		**82 00 073 370**	Oil filter mounting	1
4		**82 00 033 408**	Oil filter	1
5		**77 11 166 320**	Spacer P2 pompe à huile	1
7		**77 11 166 319**	Spacer P1 pompe à huile	1
8		**77 11 166 317**	Spacer 1 palier pompe à huile	1
9		**77 11 065 268**	Bearing	1
10		**77 11 166 314**	Oil pump bearing axle	1
11		**77 11 166 322**	Oil pump bearing support	1
12		**77 11 166 329**	Oil pump bearing 6002 2rs1	2
13		**77 11 166 326**	Entretoise roulement / poulie palier pompe à huile	1
14		**77 11 166 324**	Clips int Ø32	1
15		**77 11 166 318**	Spacer 2 palier pompe à huile	1
16	®	**77 11 166 315**	Oil pump pulley	1
17		**77 11 166 321**	Oil pump drive	1
18		**77 11 050 623**	CHS Bolt M8-25 cl:10.9	2
19		**77 11 156 918**	Washer Ø8xØ16x1.4	5
20		**77 11 166 009**	Tensioner	1
21		**77 11 166 043**	Tensioner axle	1
22		**77 11 154 227**	Flexible coupling	2
23		**77 11 128 280**	CHS Bolt M8-20	4
24		**77 00 659 822**	Dowel	2
26		**77 11 166 357**	Clamp Ø16	1

janv.-2014

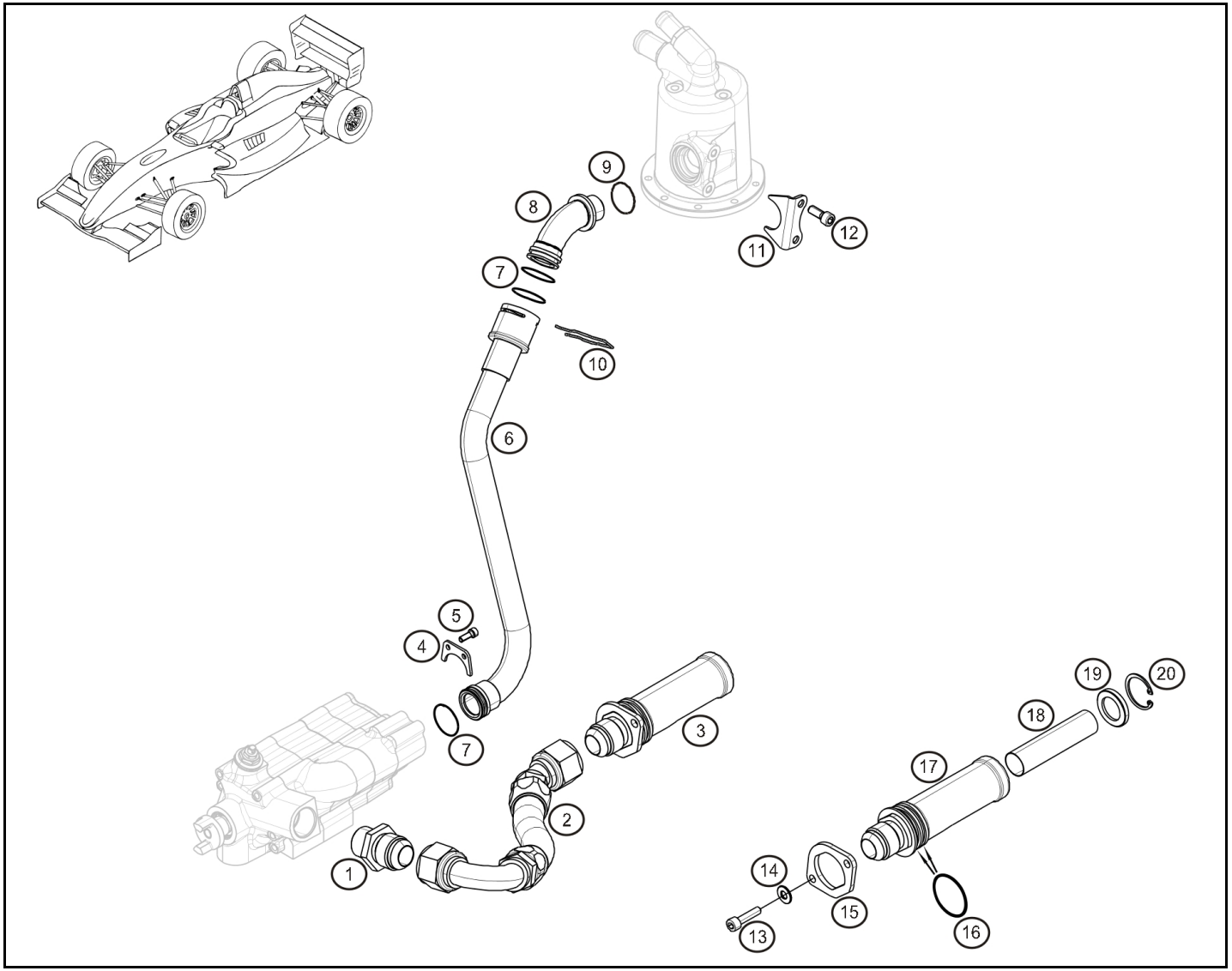

Rep.		Reference	Description	Coef
1		**77 11 166 048**	Dash adapter 3	1
2		**77 11 166 129**	Oil pipe	1
3		**77 11 166 299**	Complete oil pump stainer	1
4		**77 11 166 323**	Oil pump retainer	1
6		**77 11 166 096**	Oil pipe (pump to swirl pot)	1
7		**77 11 166 077**	O-ring Ø22x2.5	3
8		**77 11 166 097**	Swirl pot intake pipe	1
9		**77 11 166 087**	O ring Ø20x2.5 vortex	1
10		**77 11 166 336**	Oil pipe to swirl pot retainer	1
11		**77 11 166 095**	Oil tank swirl pot to	1
12		**77 11 126 315**	CHS Bolt M6x15	2
13		**77 11 128 925**	CHS Bolt M6-20	2
14		**77 11 160 368**	Plain washer Ø6xØ121.2	2
15		**77 11 166 298**	Oil pump stainer clamp	1
16		**77 11 166 281**	Oil pump stainer seal Ø34x2.5	2
17	®	**77 11 166 295**	Oil pump stainer housing	1
18		**77 11 166 296**	Filter gauze	1
19		**77 11 166 297**	Oil pump stainer cover plate	1
20		**77 11 051 236**	Internal snap ring Ø31	1

janv.-2010

RENAULT SPORT

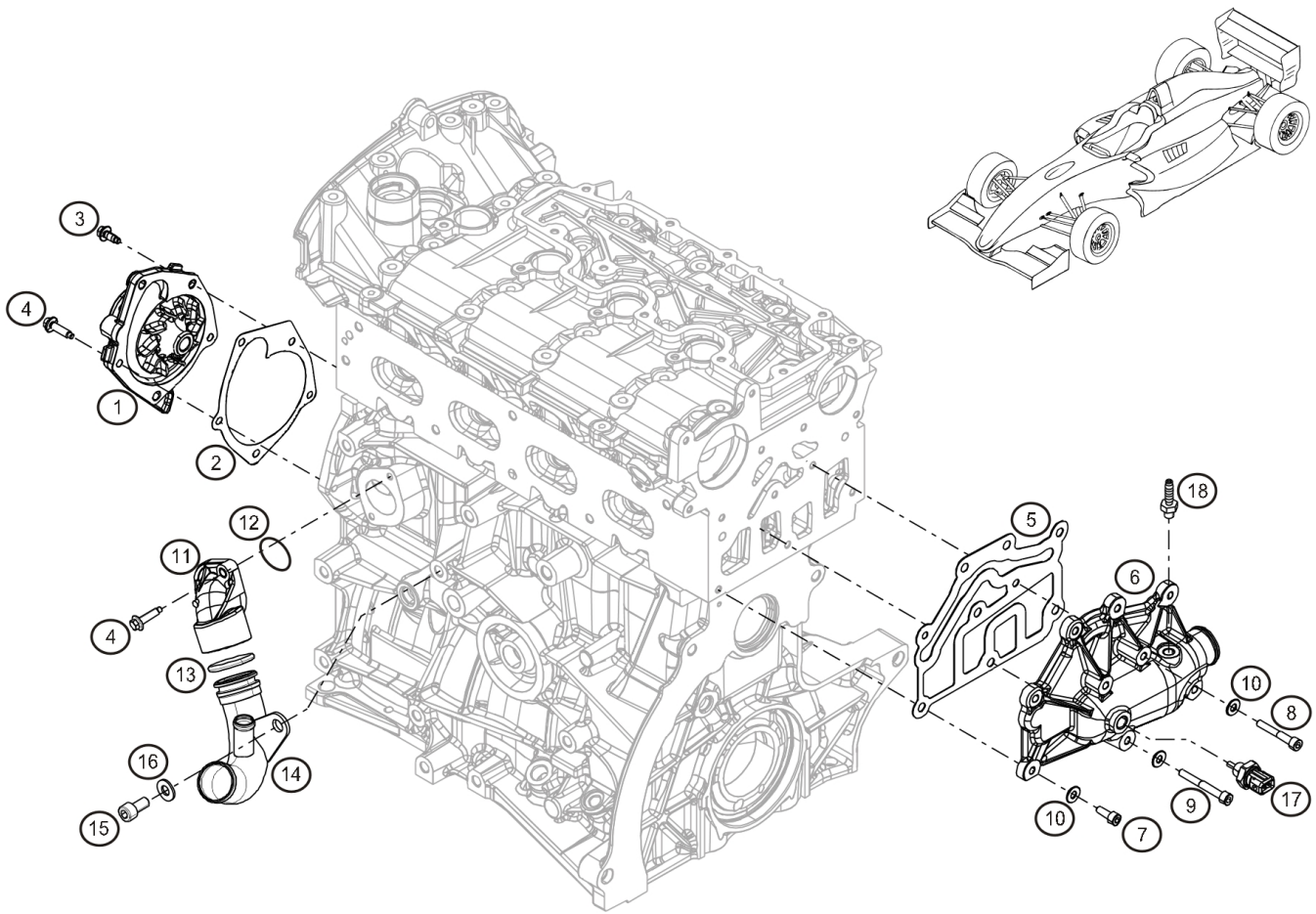

Rep.		Reference	Description	Coef
1		**77 11 160 284**	Water pump	1
2		**82 00 317 471**	Water pump seal	1
3		**77 03 002 646**	Collar screw H M6-15 cl:8.8	1
4		**77 03 002 661**	Collar screw H M6-20 cl:8.8	5
5		**77 00 107 192**	Seal	1
6		**77 11 166 072**	Coolant outlet housing	1
7		**77 11 128 925**	CHS Bolt M6-20	5
8		**77 11 064 215**	CHS Bolt M6-45 cl:12.9	2
9		**77 11 160 577**	CHS Bolt M6-55	2
10		**77 11 156 946**	Washer Ø6x14 ép:1,2	1
11		**82 00 590 563**	Coolant circuit adapter	1
12		**77 01 047 893**	Seal Ø45x5x2	1
13		**77 03 065 311**	O ring	1
14	®	**77 11 166 070**	Engine inlet coolant pipe	1
15		**77 11 128 989**	CHS Bolt M10x150-20	1
17		**77 11 162 634**	Temperature sensor	1
18		**77 11 166 337**	Coolant breather adapter	1

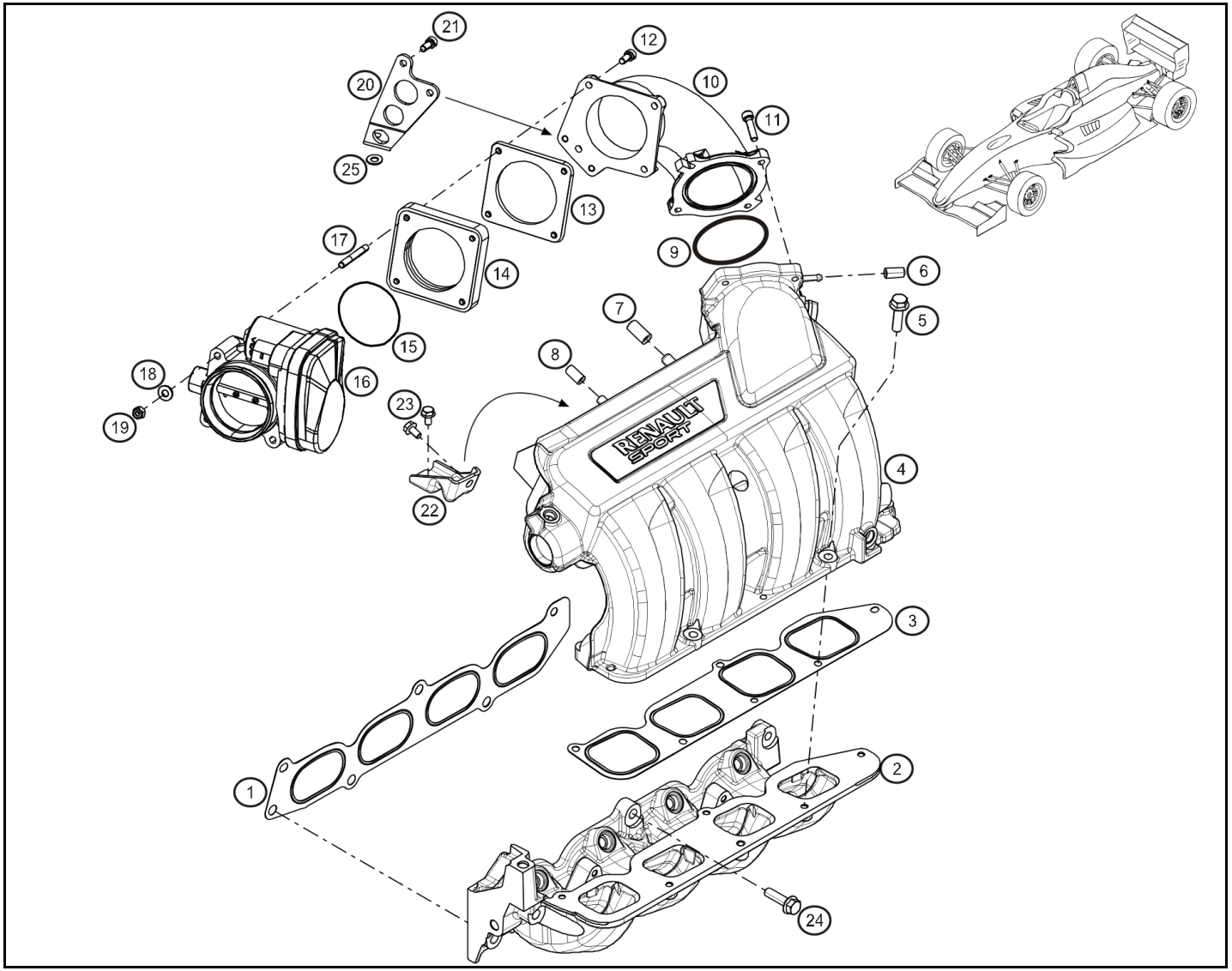

Rep.	Reference	Description	Coef
1	**82 00 490 282**	Seal	1
2	**77 11 160 328**	Fuel rail holder	1
3	**82 00 490 285**	Manifold lower seal	1
4	**82 00 717 383**	Top air intake manifold	1
5	**77 03 002 053**	Collar screw	1
6	**77 03 074 312**	Blanking plug	1
7	**77 03 074 105**	Blanking plug Ø10	1
8	**77 03 074 259**	Blanking plug	1
9	**77 11 166 088**	Viton o-ring Ø66x1.5	1
10	**77 11 166 062**	Air intake aluminium pipe	1
13	**77 11 166 058**	Joint papier	1
14	**77 11 166 712**	Throttle body rubber spacer	1
16	**77 11 166 060**	Throttle body	1
	77 11 166 752	Throttle body «evo2 loom»	1
17	**77 11 166 289**	Throttle body stud M6-54	4
20	**77 11 166 089**	Air intake pipe bracket	1
22	**82 00 539 341**	Air intake manifold bracket	1
23	**77 03 002 030**	Collar screw Hexagonal M6-12	4
25	**77 03 053 400**	Washer	1

juin-2013

RENAULT SPORT

RENAULT

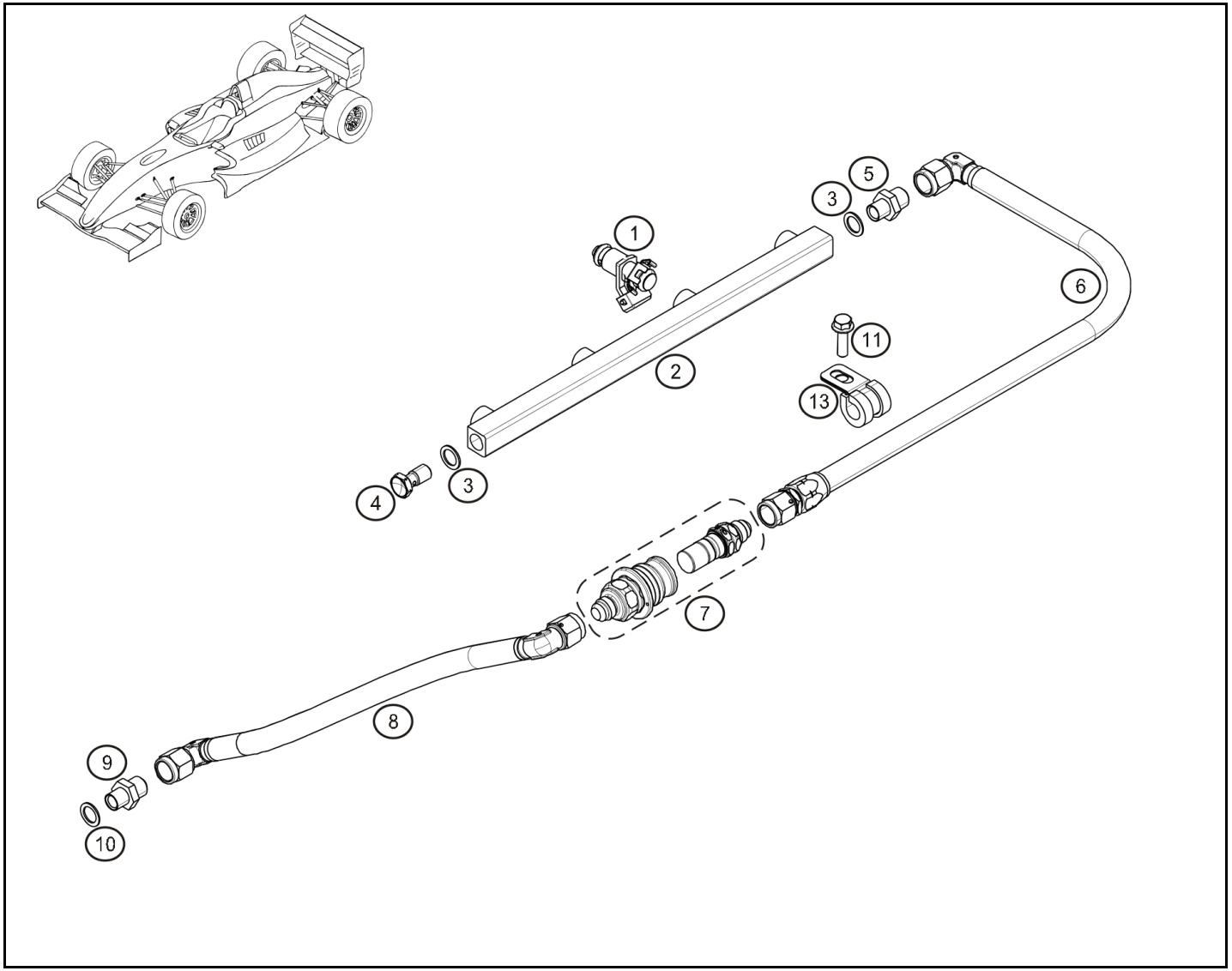

Rep.		Reference	Description	Coef
1		**77 11 160 680**	Fuel injector	4
2	®	**77 11 160 032**	Fuel rail	1
3		**79 03 062 105**	Copper washer Ø12x18 ép:2	2
4		**77 11 160 200**	Fuel rail cap	1
5		**77 11 153 613**	straight adaptor	1
6		**77 11 166 132**	Fuel pipe (coupling to fuel rail)	1
7		**77 11 154 997**	Coupleur prélèvement essence	1
8		**77 11 166 131**	Fuel pipe (Fuel tank to coupling)	1
9		**77 11 163 602**	Adaptator	1
10		**77 11 166 698**	Seal Ø14x18.7 ép:1.5	1
11		**77 03 002 053**	Collar screw	1
13		**77 05 005 278**	Steel collar	1

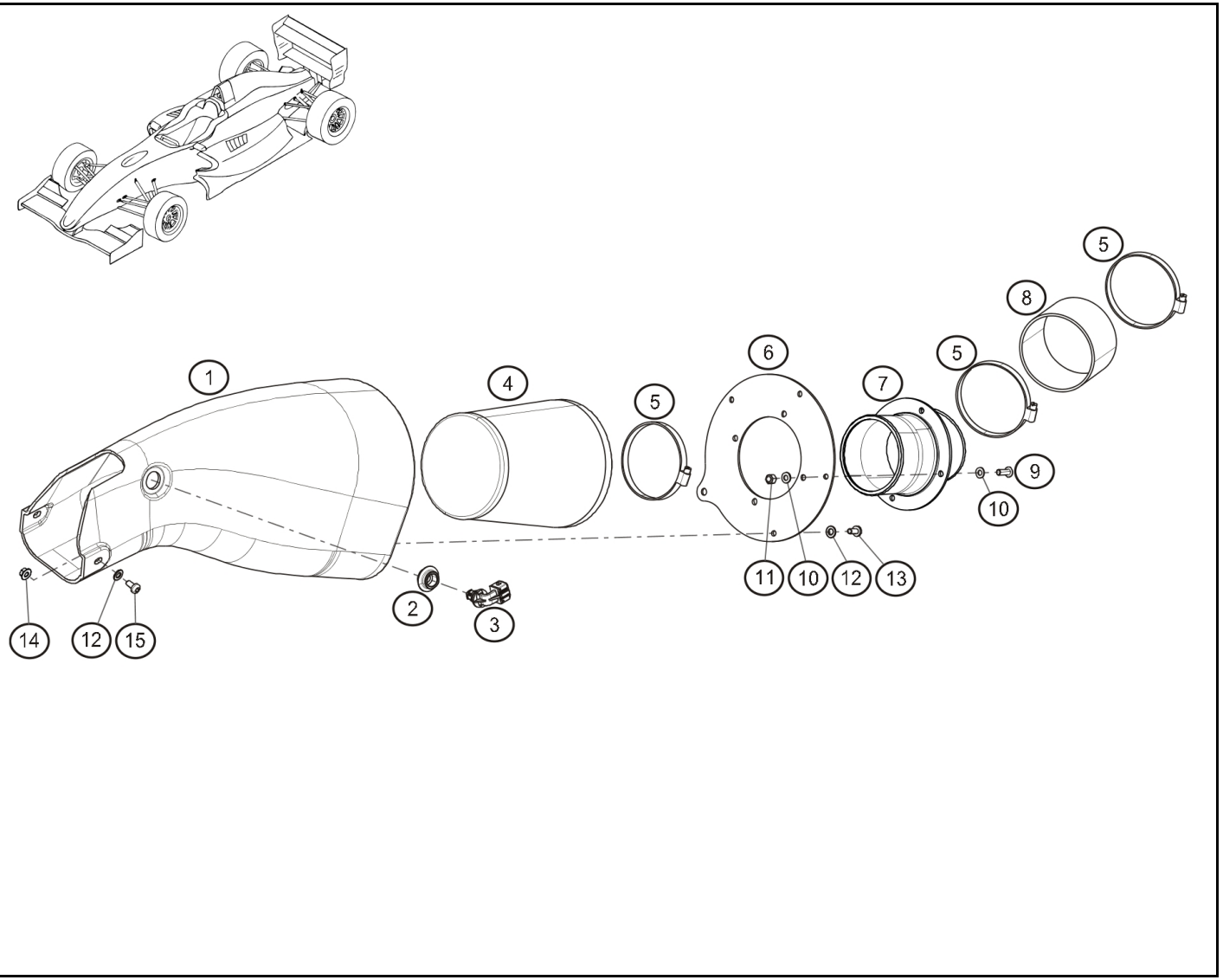

Rep.		Reference	Description	Coef
1	®	**77 11 166 825**	Air box	1
2		**77 11 165 450**	Support capteur T°air	1
3		**77 11 166 805**	Capteur Tair	1
4		**77 11 166 061**	Air filter	1
5		**77 11 158 250**	Zebra stainless collar Ø60-80	3
6	®	**77 11 166 826**	Plaque fermeture boite à air	1
7	®	**77 11 166 349**	Air filter support	1
8		**77 11 156 647**	Hose Ø70 lg:50mm	1
9		**77 11 154 768**	Button head socket screw M5-16	4
10		**77 11 154 878**	Washer Ø5	8
11		**77 03 034 007**	Locknut M5	4
12		**77 11 166 867**	Washer ONDUFLEX Ø5	7
13		**77 11 154 764**	BHS Bolt M5-12	5
14		**77 11 154 733**	Nut-SIMMONDS M5	2
15		**77 11 166 864**	Vis BHC emb. M5-12	2

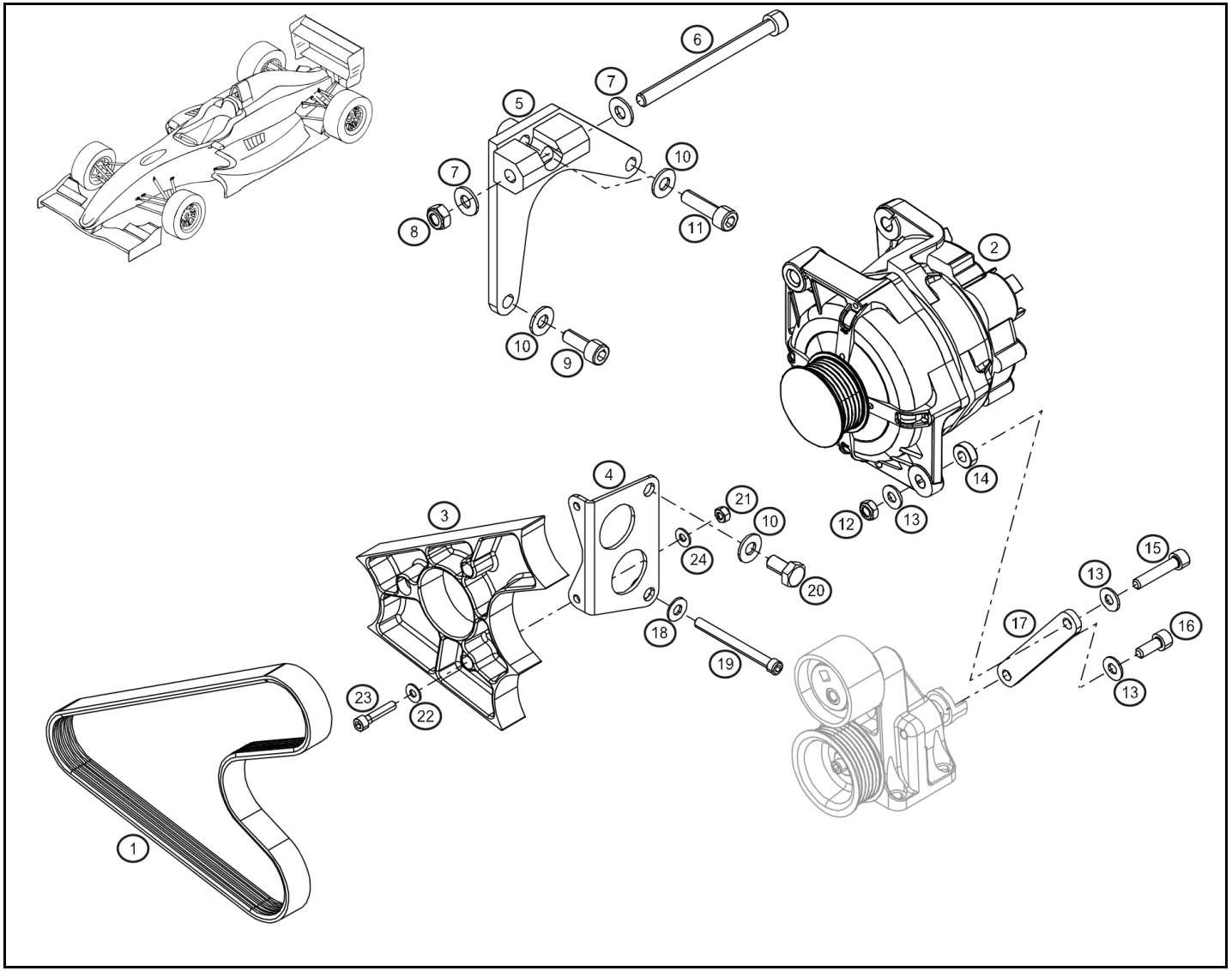

Rep.		Reference	Description	Coef
1		**77 11 166 067**	Accessory belt	1
2		**77 11 166 034**	Alternator	1
3	®	**77 11 166 066**	Gravel protection	1
4		**77 11 166 069**	Gravel protection support	1
5	®	**77 11 166 063**	Top alternator support	1
6		**77 11 166 068**	CHS Bolt M10-130	1
7		**77 03 053 075**	Washer Ø10	2
8		**77 03 034 106**	Nut Nylstop M10	2
9		**77 11 051 271**	CHS Bolt M10-25 cl:12.9	2
10		**77 11 128 658**	Washer SPS Ø10	3
11		**77 11 051 273**	CHS Bolt M10x150-35	2
12		**77 03 034 007**	Locknut M5	1
13		**77 11 156 918**	Washer Ø8xØ16x1.4	3
14		**77 11 166 065**	Alternator bracket spacer	1
15		**77 11 156 960**	CHS Bolt M8x125-40 CL 12.9	1
16		**77 11 128 280**	CHS Bolt M8-20	1
17		**77 11 166 064**	ALternator bracket	1
18		**77 11 154 203**	Washer Schnor Ø7	1
19		**77 11 166 091**	CHS Bolt M7-75 fix pare pierre	2
20		**77 03 101 546**	H Bolt M10-25	1
21		**77 03 034 008**	Locknut M6	2
22		**77 11 126 686**	Washer SPS Ø6	3
23		**77 03 009 026**	CHS Bolt M6-30	2
24		**77 11 160 368**	Plain washer Ø6xØ121.2	2

déc.-2009

RENAULT SPORT

RENAULT

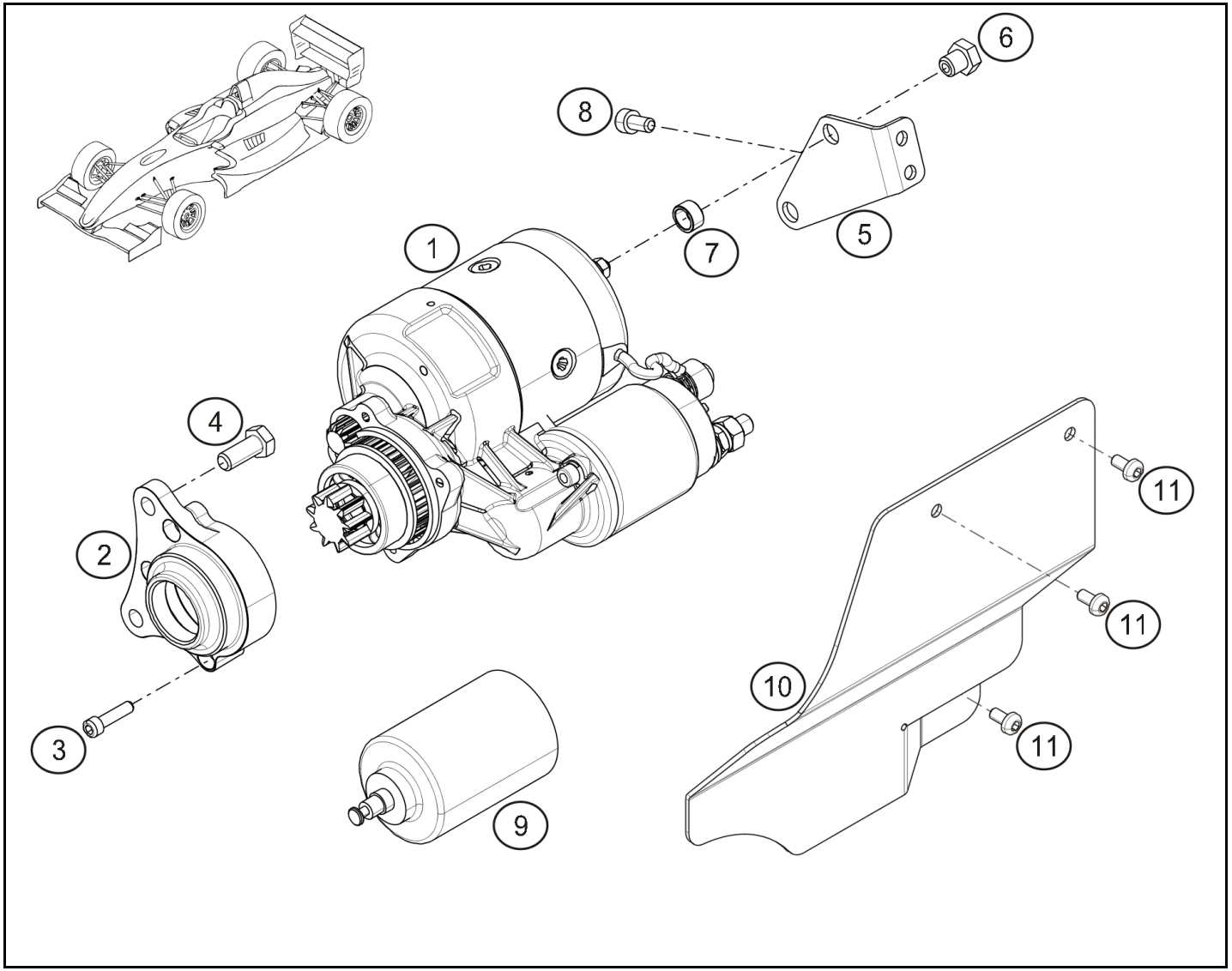

Rep.		Reference	Description	Coef
1		**77 11 166 768**	starter motor	1
2		**01 01 910 803**	Starter motor front support	1
3		**01 00 301 327**	CHS Bolt M5-20 cl:8.8 Zn	3
4		**01 00 305 061**	H Bolt M8x20 cl.10	2
5		**01 01 910 804**	Starter motor bracket	1
6		**01 00 085 981**	Starter motor nut	2
7		**01 01 910 805**	Starter motor rear spacer	2
8		**01 00 301 540**	CHS Bolt M6x12 cl.10	2
9		**77 11 166 769**	Solenoid	1
10	®	**77 11 166 803**	Ecran thermique démarreur	1
11		**77 11 156 958**	Vis CBHC M5-10	3

janv.-2013

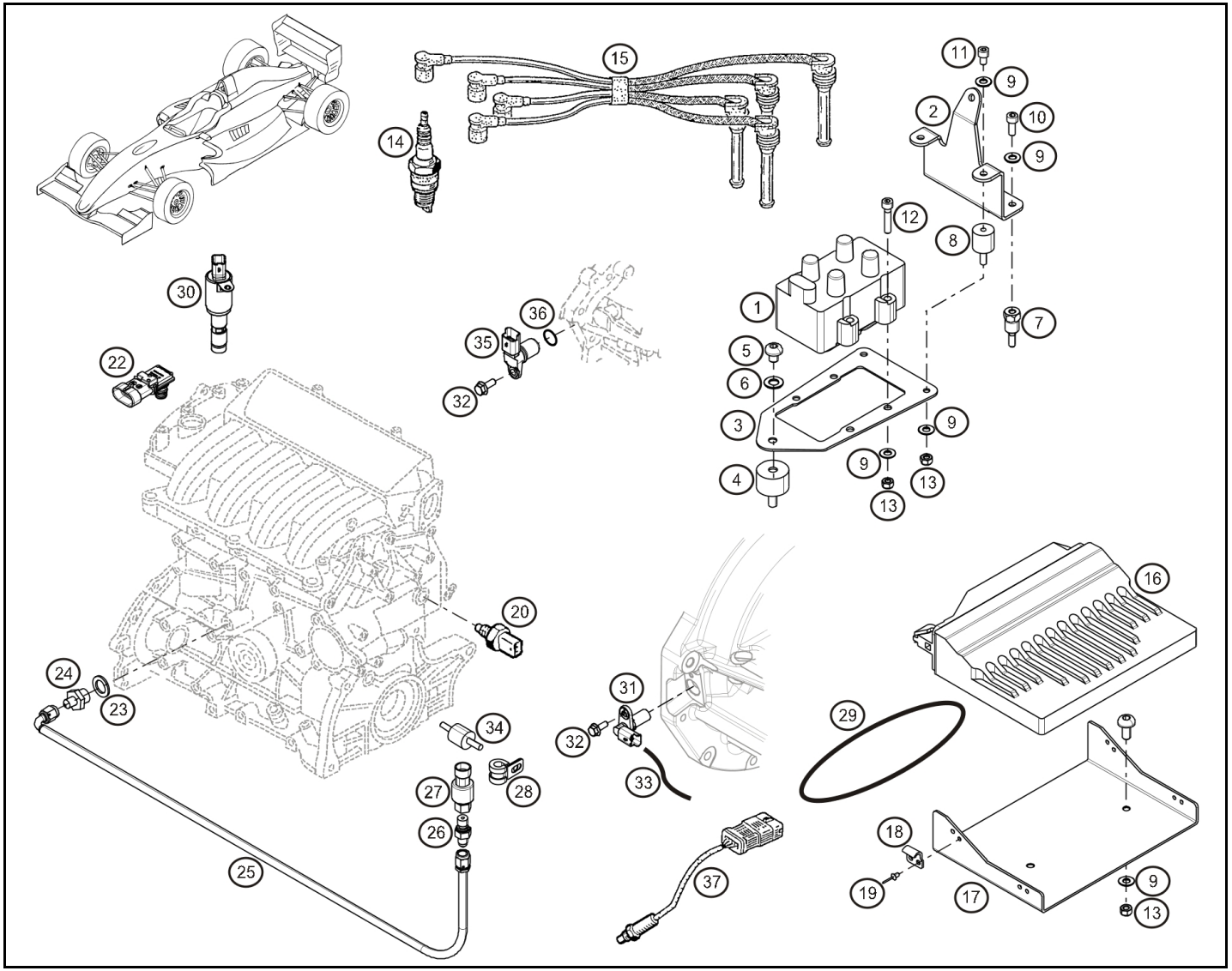

Rep.		Reference	Description	Coef
1		**07 11 155 389**	Coil	1
2	®	**77 11 166 292**	Coil vertical bracket	1
3	®	**77 11 166 291**	Coil horizontal bracket	1
4		**77 11 157 155**	Flexible mounting	1
5		**77 11 068 222**	Vis CBHC Ø6 -10	1
6		**77 11 156 918**	Washer Ø8xØ16x1.4	1
7		**77 11 166 294**	Coil support mounting spacer	2
8		**77 11 166 293**	Small silentblox for coil Ø	2
9		**77 11 160 368**	Plain washer Ø6xØ121.2	8
10		**77 11 158 344**	CHS Bolt M6-16	2
11		**77 11 156 938**	Button head socket screw M8-10	2
12		**77 11 050 600**	CHS Bolt M6-35 cl:12.9	4
13		**77 03 034 008**	Locknut M6	6
14		**77 11 160 278**	NGK R sparkplug	4
15		**77 11 160 227**	Coil loom	1
16	®	**77 11 166 420**	ECU	1
17	®	**77 11 166 411**	Mounting bracket-ECU	1
18		**77 11 158 059**	Hanger	4
19		**77 11 166 142**	Rivet Ø3x8	8
20		**77 11 162 634**	Temperature sensor	1
22		**77 11 155 392**	Air pressure sensor	1
23		**77 11 050 940**	Copper washer Ø14x20 ép:1mm	1
24		**77 11 157 208**	Adaptator	1
25		**77 11 166 092**	Oil pressure sensor pipe	1
26		**77 11 166 048**	Dash adapter 3	1
27		**77 11 160 027**	Oil pressure sensor	1
		77 11 166 756	Capteur pression huile "évo2"	1
		77 11 166 922	Oil pressure sensor 2015	1
28		**77 05 005 278**	Steel collar	1
29		**77 11 166 412**	ECU retaining o-ring	2
30		**77 11 166 735**	VVT solenoid valve	1
		77 11 166 754	VVT solenoid valve «evo2 loom»	1
31		**77 11 160 382**	Engine speed sensor	1
32		**77 03 002 053**	Collar screw	2
33		**77 11 166 339**	Crankshaft sensor loom	1
34		**77 11 158 219**	Silentbloc 20x25 M6-16.5	1
35		**77 11 160 902**	Camshaft position sensor	1
		77 11 166 753	Camshaft position sensor «evo2 loom»	1
36		**82 00 197 717**	O ring	1
37		**77 11 155 391**	Lambda probe	1

avr.-2015

RENAULT SPORT

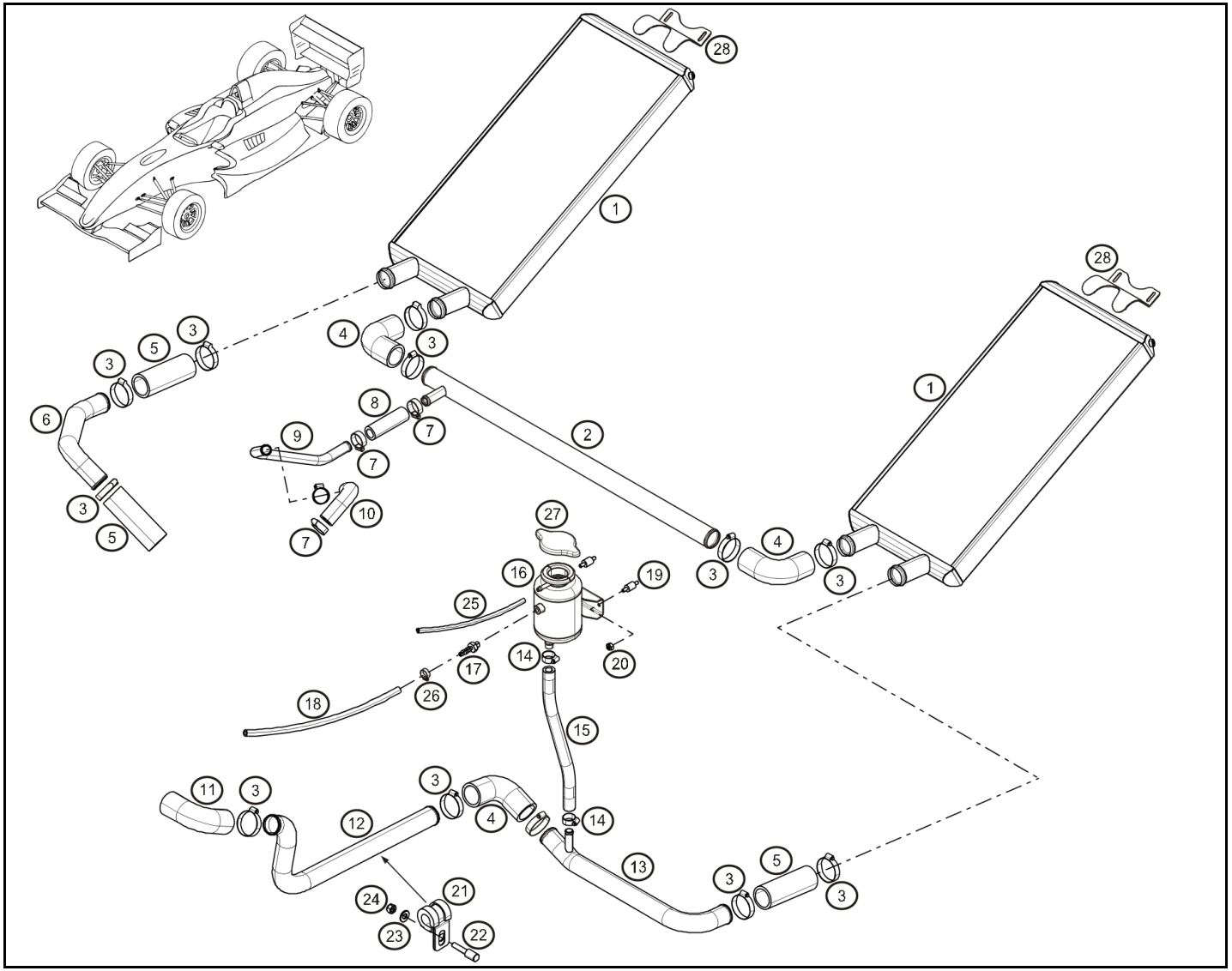

Rep.		Reference	Description	Coef
1	®	**77 11 166 350**	Water radiator	2
2		**77 11 166 351**	Water pipe in chassis	1
3		**77 11 166 353**	Clamp Ø32	14
4		**77 11 166 352**	Hose Ø32 coude à 90°	3
5		**77 11 166 354**	Hose Ø32	3
6	®	**77 11 166 355**	Engine in aluminium pipe	1
7		**77 11 166 357**	Clamp Ø16	4
8		**77 11 166 356**	Hose Ø16	1
9		**77 11 166 358**	Modin aluminium pipe	1
10		**77 11 154 249**	Modin to radiator pipe	1
11		**77 11 156 510**	Durite Ø32 à 90° Lg : 150x150	1
12		**77 11 166 073**	Engine outlet coolant pipe	1
13		**77 11 166 359**	Radiator in aluminium pipe	1
14		**77 11 166 361**	Clamp Ø12	2
15		**77 11 166 360**	Hose Ø12	1
16		**77 11 166 362**	Swirl pot	1
17		**77 11 166 364**	Coolant swirl pot adapter	1
18		**77 11 166 736**	Breather pipe	1
19		**77 11 166 363**	Swirlpot silentbloc	2
20		**77 03 033 009**	Nut with floating washer M5	2
21		**77 11 166 074**	Steel collar	1
22		**77 11 166 075**	Steel collar stud	1
23		**77 11 160 368**	Plain washer Ø6xØ121.2	1
24		**77 03 033 135**	Nut M6	1
25		**77 11 166 338**	Swirlpot breather pipe	1
26		**77 03 083 334**	Clamp	1
27		**77 11 166 669**	Bouchon vase expension	1
28		**77 11 166 780**	Support sup radia	2

déc.-2012

RENAULT SPORT

RENAULT

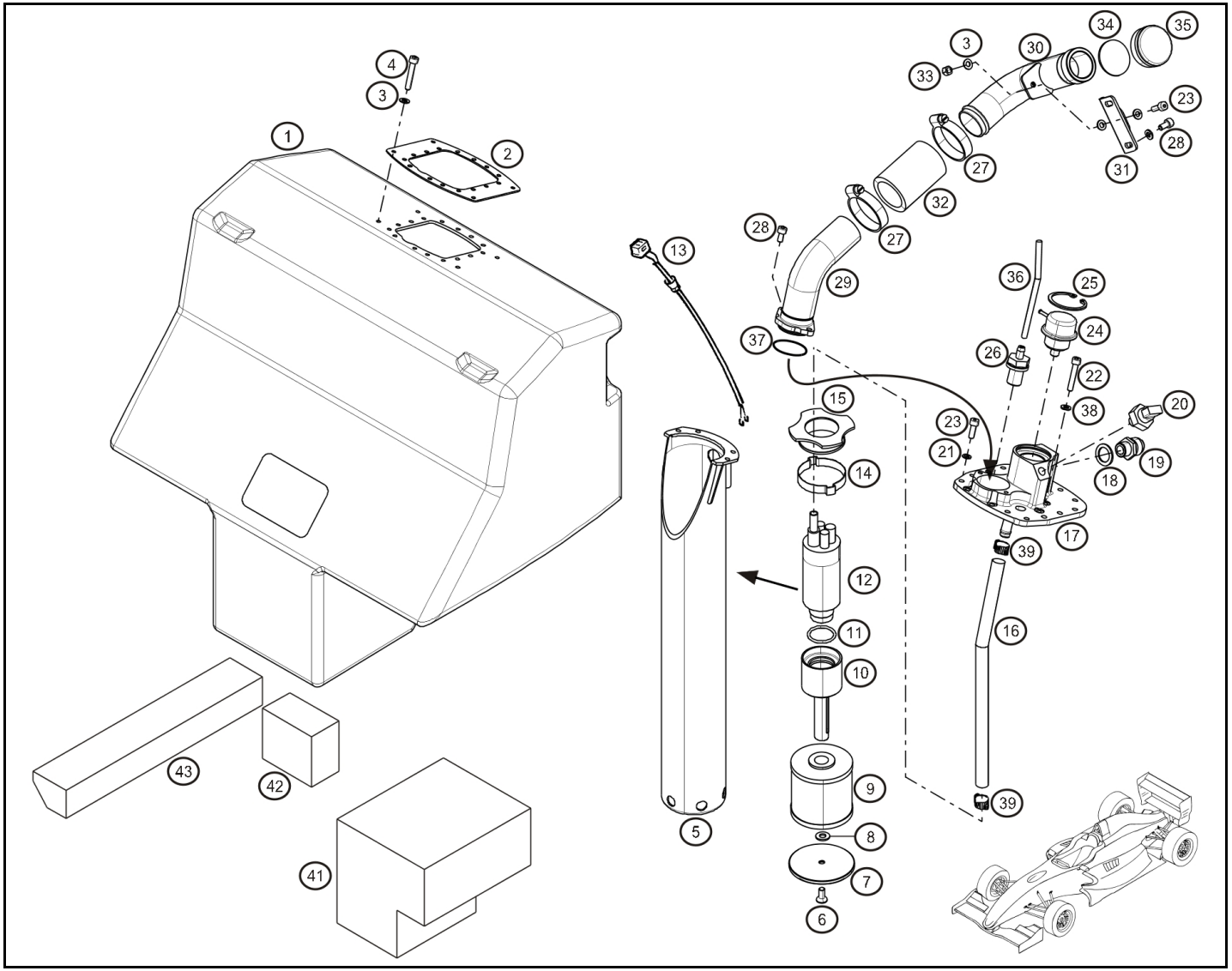

Rep.		Reference	Description	Coef
1	®	**77 11 166 665**	Fuel cell	1
2		**77 11 166 036**	Fuel tank top seal	1
3		**77 11 154 878**	Washer Ø5	4
4		**77 11 154 769**	Screw	4
5	®	**77 11 166 161**	Fuel tower	1
6		**77 11 166 177**	FHS Bolt M6-15	1
7		**77 11 166 169**	Fuel filter plastic washer	1
8		**77 11 126 686**	Washer SPS Ø6	1
9		**77 11 161 845**	Fuel filter	1
10		**77 11 166 170**	Fuel filter support	1
11		**77 11 166 171**	Fuel pump o-ring	1
12		**77 11 166 727**	Pompe à essence cablée	1
13		**77 11 154 658**	Fuel pump loom	1
14		**77 11 166 173**	Fuel pump mounting collar	1
15		**77 11 166 174**	Fuel pump top protection	1
16		**77 11 162 707**	Hose	1
17		**77 11 166 162**	Fuel pressure regulator support	1
18		**77 11 166 698**	Seal Ø14x18.7 ép:1.5	1
19		**77 11 163 602**	Adaptator	1
20		**77 11 158 514**	Pressure sensor	1
		77 11 166 755	Capteur pression essence "évo2"	1
21		**77 11 126 780**	Washer SPS Ø5	11
22		**77 11 158 448**	Screw TC M5-16 cl:10.9	4
23		**77 11 166 397**	CHS Bolt M5-15	11
24		**77 11 156 269**	Pressure regulator 3,5 bars	1
25		**77 11 166 176**	Internal snap ring Ø35	1
26		**77 11 158 075**	Air breather valve	1
27		**77 11 166 194**	Collier serrage Ø30-45	2
28		**77 11 165 627**	CHS Bolt M5-12 cl:12.9	2
29		**77 11 166 163**	Inferior fuel filling tube	1
30	®	**77 11 166 164**	Top fuel filling tube	1
31		**77 11 166 165**	Fuel filling tube support	1
32		**77 11 166 168**	Fuel filling pipe	1
33		**77 03 034 007**	Locknut M5	1
34		**77 11 166 166**	Filling cap seal	1
35		**77 11 166 167**	Fuel cap	1
36		**77 11 166 287**	Venting pipe Ø8x14 lg:245	1
37		**77 11 166 285**	O ring Ø30x2	1
38		**77 11 166 286**	Seal Ø5	4
39		**77 01 407 072**	Adjustable clamp 11-19	2
41		**77 11 166 858**	Mousse cale reservoir gros G	1
42		**07 11 166 858**	mousse reservoir petit AR	1
43		**00 11 166 858**	mousse reservoir pentagone D	1

avr.-2015

RENAULT SPORT

RENAULT

FORMULA RENAULT 2.0

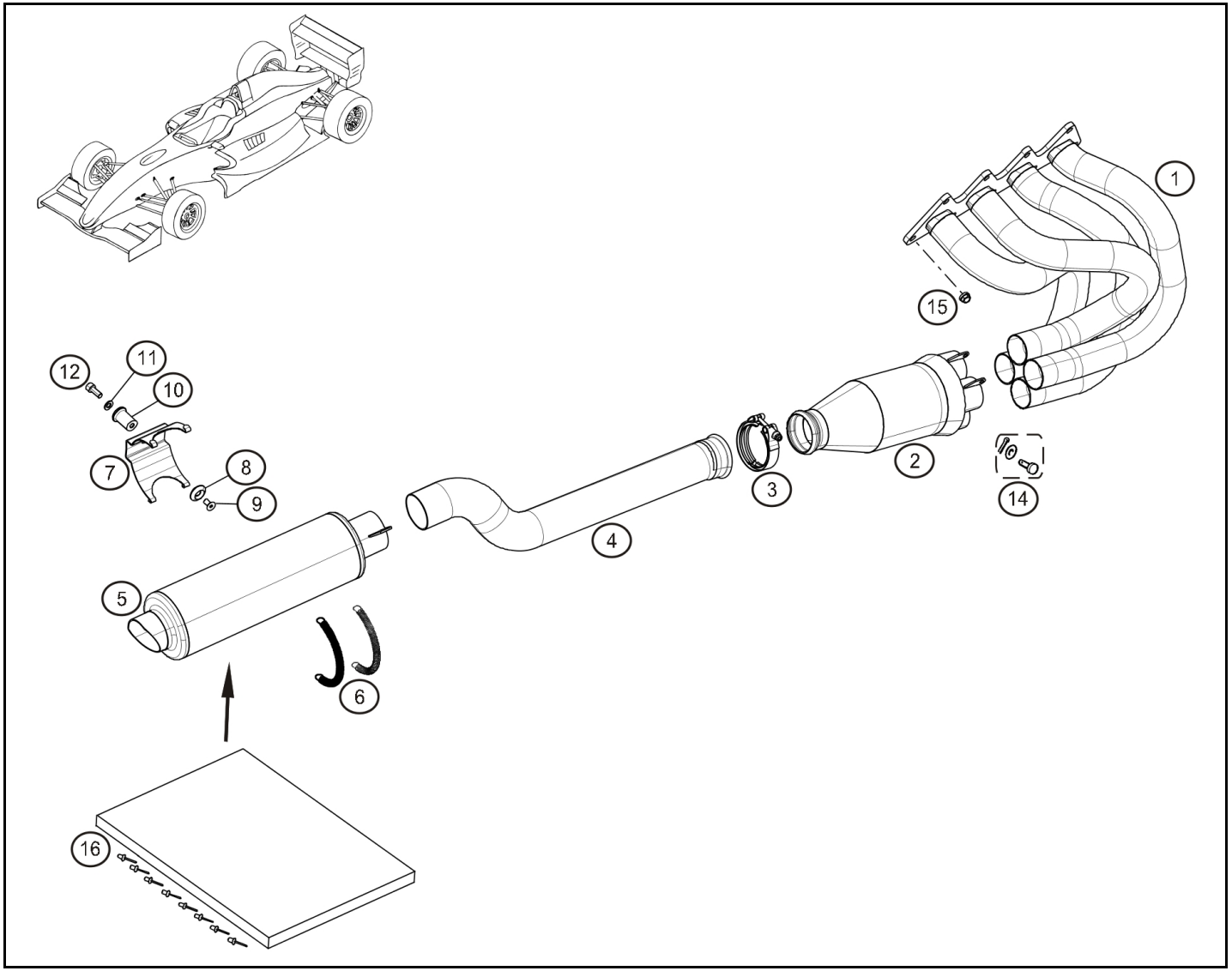

Rep.		Reference	Description	Coef
1		**77 11 166 120**	Exhaust manifold	1
2		**77 11 166 721**	Empty catalytic converter	1
		77 11 166 121	« NEC » catalytic converter	1
3		**77 11 150 452**	Exhaust collar	1
4		**77 11 166 122**	Exhaust intermediate line	1
5		**77 11 166 124**	Silencer	1
6		**77 11 166 117**	Exhaust retaining spring	1
7	®	**77 11 166 116**	Exhaust bracket	1
8		**77 11 166 115**	Conical washer	1
9		**77 11 166 866**	FHS Bolt M8-16 cl:10.9	1
10		**77 11 166 114**	Exhaust spacer	1
11		**77 11 154 791**	Washer	1
12		**77 11 166 413**	FHS Bolt M8-30	1
14		**77 11 160 656**	Goupilles de fixation	4
15		**77 03 033 107**	Nut-underneath HM8	10
16		**00 11 166 124**	Silencer internal replacement kit	1

févr.-2013

RENAULT SPORT

RENAULT

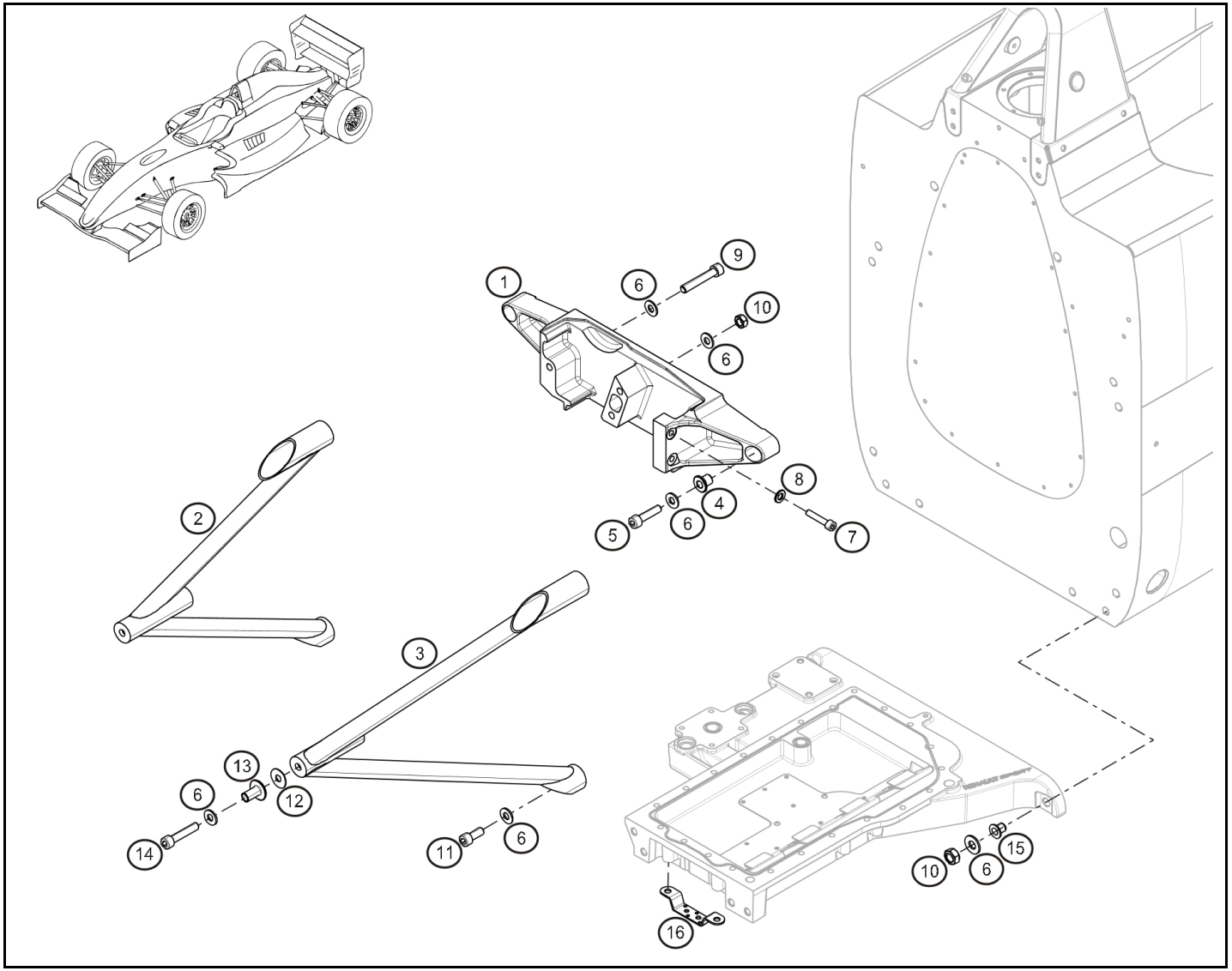

Rep.		Reference	Description	Coef
1	®	**77 11 166 155**	Top engine beam	1
2	®	**77 11 166 156**	LH engine frame	1
3	®	**77 11 166 157**	RH engine frame	1
4		**77 11 166 154**	Insert support moteur supérieur	2
5		**77 11 065 248**	CHS Bolt M10-40	2
6		**77 11 154 909**	Washer	11
7		**77 11 156 960**	CHS Bolt M8x125-40 CL 12.9	2
8		**77 11 154 791**	Washer	2
9		**77 11 154 744**	CHS Bolt M10-60	1
10		**77 03 034 106**	Nut Nylstop M10	4
11		**77 11 156 901**	Screw CHC10-25	4
12		**77 11 166 159**	Shim 0.5mm	1
		77 11 166 160	Shim 1mm	1
13		**77 11 166 158**	Oil tank bush	2
14		**77 11 064 819**	CHS Bolt M10-50	2
15		**77 11 166 049**	Oil sump bush	4
16		**77 11 166 403**	Omega datalogger 2 écrous	1

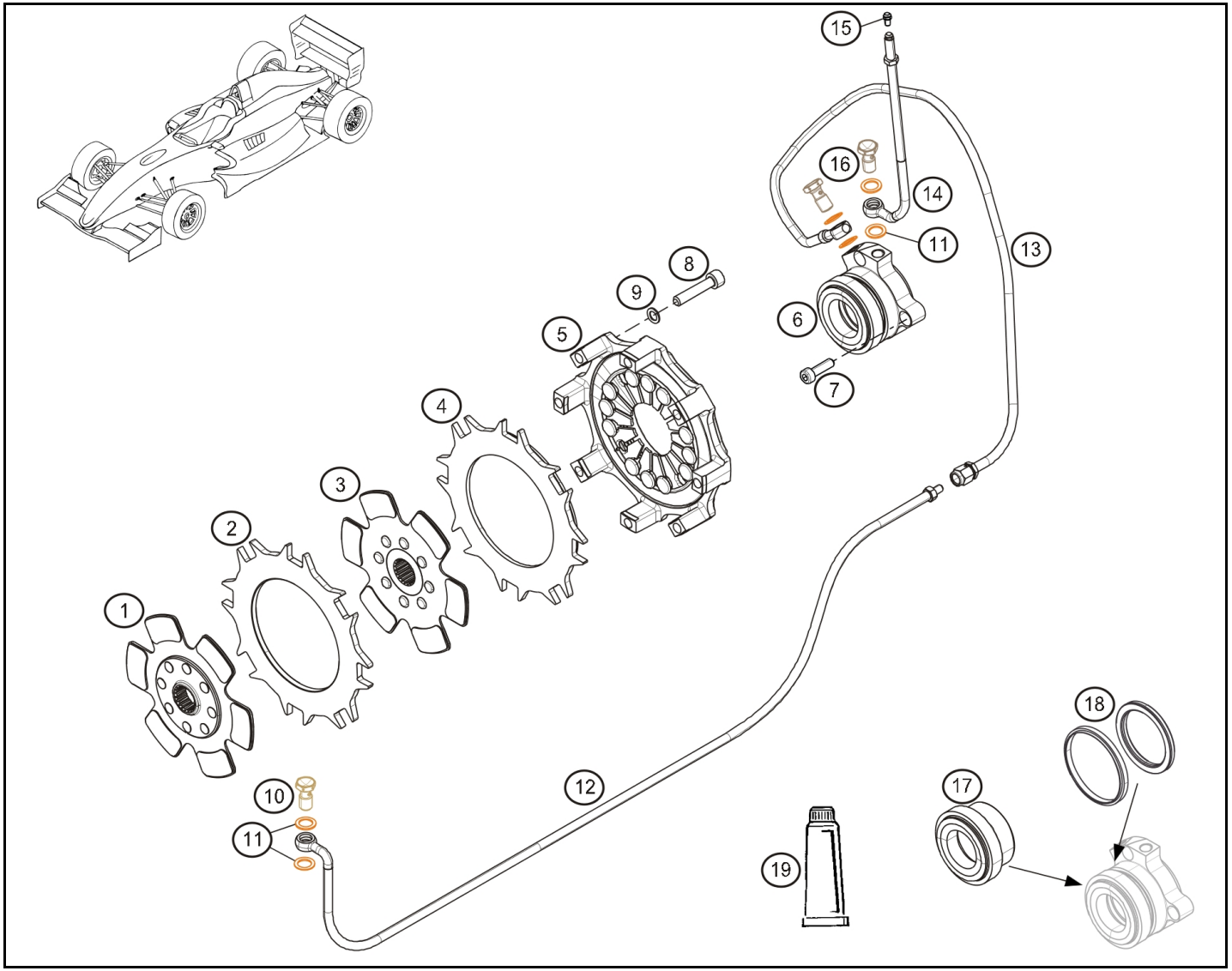

Rep.	Reference	Description	Coef
1	**77 11 166 843**	Disque friction 1	1
2	**77 11 166 844**	Disc-Smooth	1
3	**77 11 166 845**	Disque friction 2	1
4	**77 11 166 846**	Plateau presseur	1
5	**77 11 166 679**	Clutch mechanism	1
6	**77 11 166 840**	Clutch thrust bearing	1
7	**77 11 154 199**	CHS Bolt M7x100-25	3
8	**77 11 156 960**	CHS Bolt M8x125-40 CL 12.9	8
9	**77 11 126 887**	Washer SPS Ø8	8
10	**77 11 165 188**	Banjo bolt	1
11	**77 11 156 532**	Copper washer 10x14x1	6
12	**77 11 166 125**	Clutch line to brake pump	1
13	**77 11 166 838**	Tuyau AR sur butée embrayage	1
14	**77 11 166 839**	Tuyau de purge butée embrayage	1
15	**77 11 166 128**	Clutch bleed screw	1
16	**77 11 129 633**	Banjo bolt	2
17	**77 11 166 841**	Roulement butée embrayage	1
18	**77 11 166 842**	Kit joints butée embrayage	1
19	**07 11 166 842**	Lubrifiant de montage	1
100	**00 11 166 842**	Kit outil révision butée d'embrayage	1

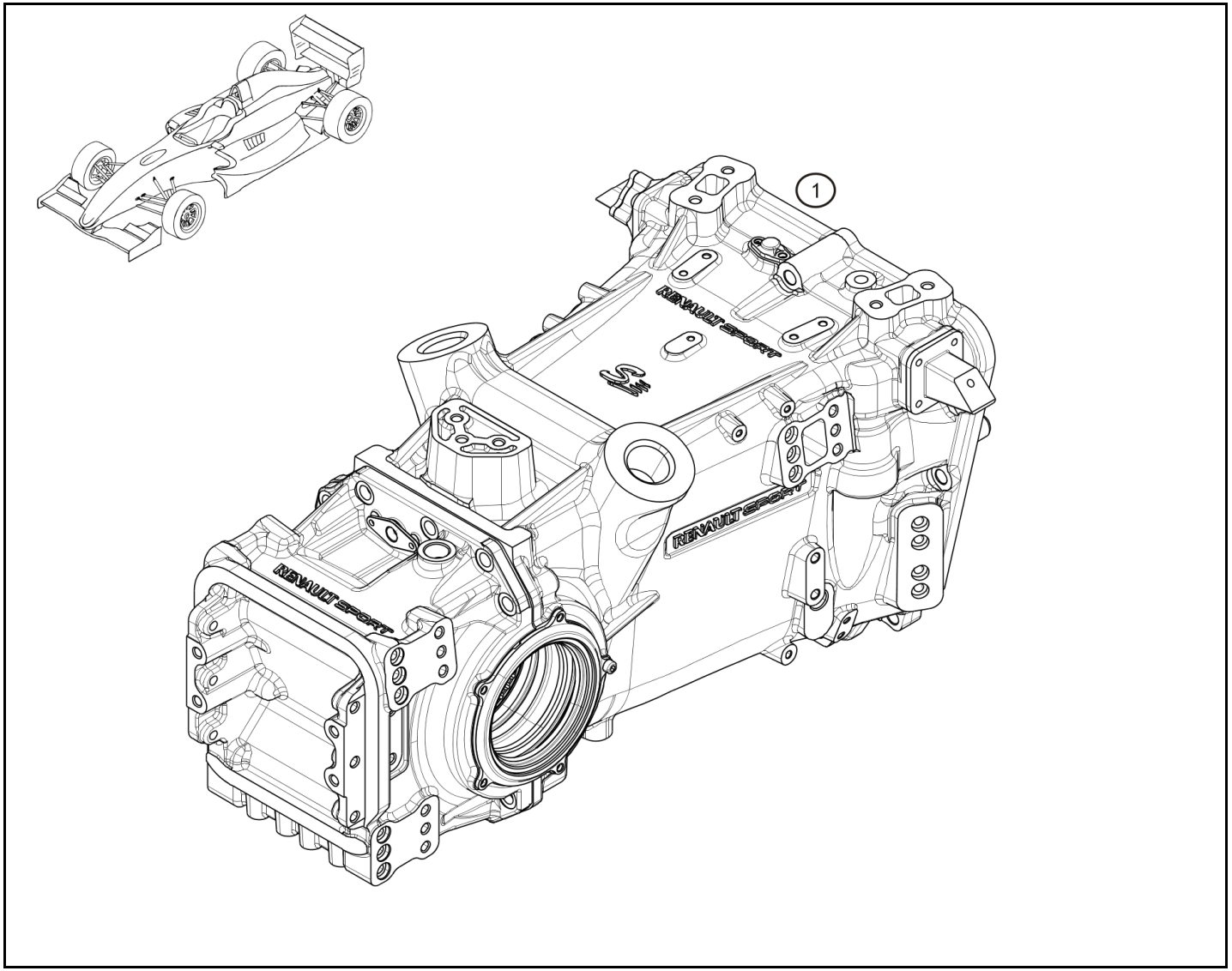

Rep.	Reference	Description	Coef
1	**77 11 166 099**	Gearbox	1
100	**77 11 166 715**	reamer Ø15 (fourchette BV)	1
101	**77 11 166 716**	reamer Ø20 (fourchette BV)	1

déc.-2012

RENAULT SPORT

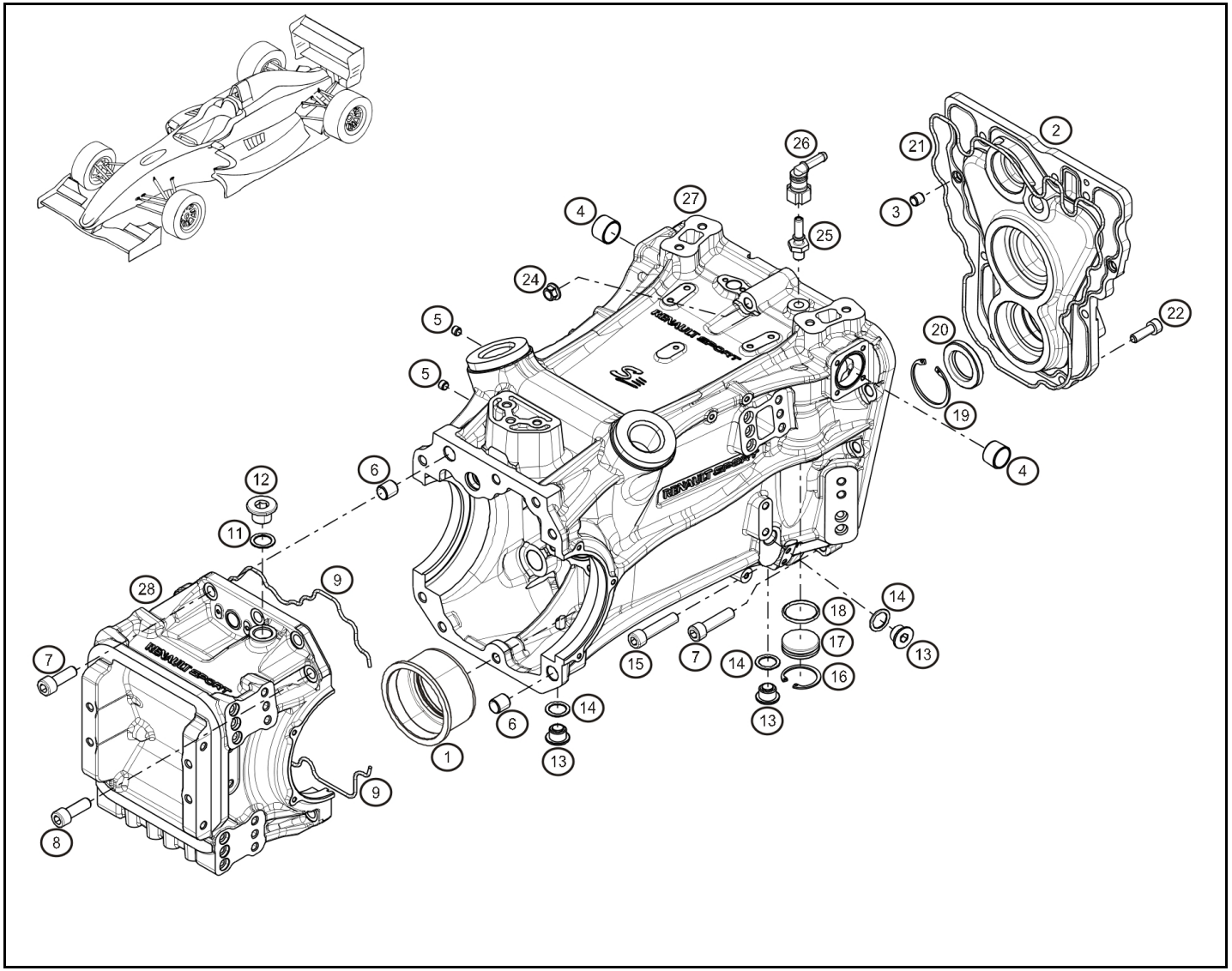

Rep.	Reference	Description	Coef
1	**01 01 910 028**	Frète de carter	1
2	**77 11 166 111**	Closing plate	1
3	**01 00 059 035**	Moulding Ø8xØ10x10	2
4	**01 01 202 004**	Permaglide bush	2
5	**01 01 404 429**	Moulding Ø8xØ6x6	2
6	**01 01 501 110**	Dowel pin Ø14x12 Lg:15	2
7	**01 00 301 526**	CHS Bolt M10x40 cl.12.9 ZN	8
8	**01 00 301 525**	CHS Bolt M10x30 cl.12.9 ZN	5
9	**02 01 100 280**	Sealing cord Ø3	2
11	**77 03 062 014**	Filling cap seal	1
12	**77 03 075 076**	Cap M18x150	1
13	**77 11 156 704**	Sump plug- Magnetic insert	3
14	**77 03 062 062**	Joint de vidange	3
15	**01 00 301 424**	CHS Bolt M10x45 cl.12.9 ZN	1
16	**01 00 602 015**	Internal snap ring Ø35	1
17	**01 01 910 010**	Selector plug	1
18	**01 00 201 104**	O ring-Nitrile Ø29x3	1
19	**01 00 602 043**	Circlips-Interior Ø47	1
20	**01 00 204 042**	Lipseal Ø28x47x7	1
21	**01 00 201 245**	O ring Ø3x305	1
22	**01 00 301 532**	CHS Bolt M8x25 cl.12.9 ZN	7
24	**01 00 499 005**	Nut-SIMMONDS M10x125	1
25	**01 09 999 683**	Venting adapter	1
26	**01 09 022 106**	Air breather adapter M10x100	1
27	**01 19 100 291**	Main casing	1
28	**01 01 910 004**	Gearbox rear housing	1

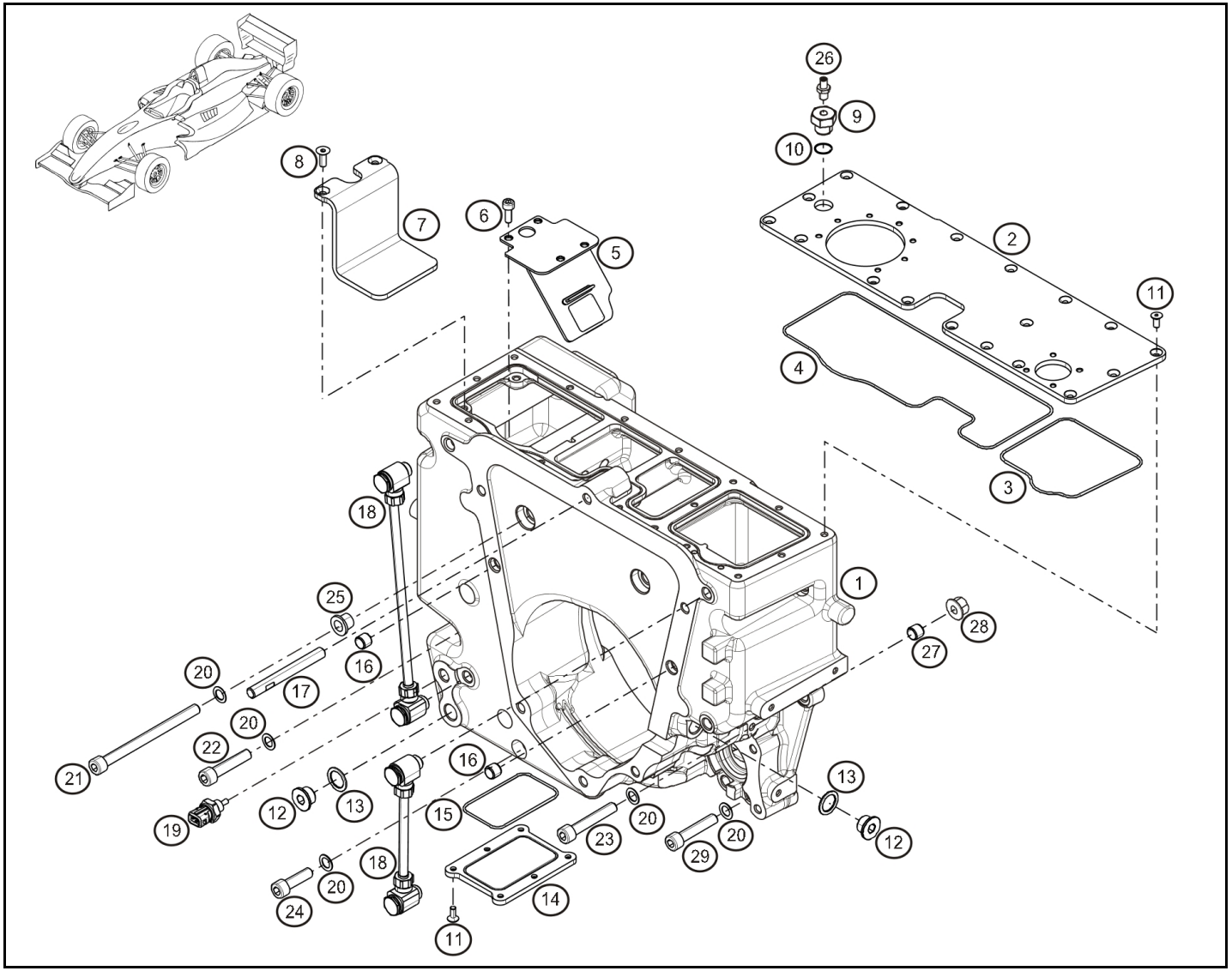

Rep.	Reference	Description	Coef
1	**77 11 166 847**	Bache à huile nue "évo"	1
2	**01 01 910 011**	Top closing plate	1
3	**01 00 201 155**	O ring Ø2x113	1
4	**01 00 201 244**	O ring Ø2x230	1
5	**01 19 100 251**	Oil tank lower filtration plate	1
6	**01 00 301 291**	CHS Bolt M6-16	5
7	**01 01 910 021**	oil tank top filtration plate	1
8	**01 00 303 038**	FHS Bolt M6x16 cl.10.9	2
9	**77 11 166 887**	Bouchon bache à huile	1
10	**77 11 166 771**	O ring Ø18x2.5	1
11	**01 00 303 045**	FHS Bolt M5x12 cl.10.9	24
12	**01 01 402 058**	Sump plug- Magnetic insert	3
13	**77 03 062 062**	Joint de vidange	3
14	**01 01 910 012**	Oil tank bottom plate	1
15	**01 00 201 145**	O ring Ø2x74	1
16	**01 09 003 102**	Moulding Ø10xØ12xlg10	2
17	**01 01 910 017**	Stud M10x125/lg90/M10x150	1
18	**77 11 166 138**	Oil tank level kit	1
19	**77 11 162 634**	Temperature sensor	1
20	**77 11 128 658**	Washer SPS Ø10	8
21	**77 11 166 068**	CHS Bolt M10-130	2
22	**77 11 064 819**	CHS Bolt M10-50	1
23	**77 11 154 744**	CHS Bolt M10-60	1
24	**77 11 051 273**	CHS Bolt M10x150-35	2
25	**77 11 166 143**	Oil tank bush	2
26	**77 11 166 888**	Valve équipée pour bouchon bache à huile	1
27	**77 11 154 689**	Dowel	1
28	**77 03 034 249**	Ecrou FIHE M10	1
29	**77 11 166 925**	Button head socket screw M10-50	2

mai-2015

RENAULT SPORT

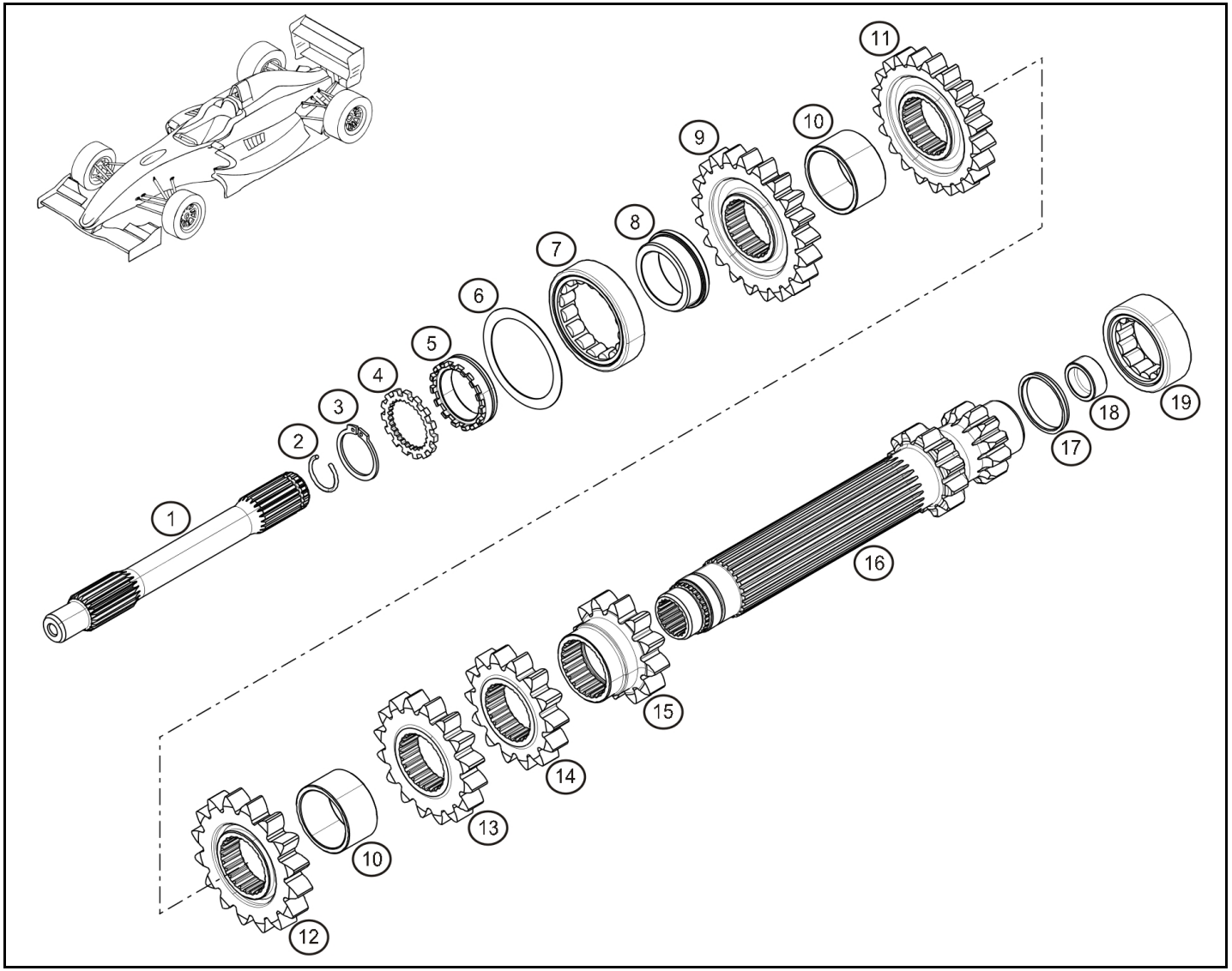

Rep.	Reference	Description	Coef
1	**01 01 910 110**	Clutch shaft	1
2	**01 09 908 008**	Lock washer RB20	1
3	**01 00 601 005**	Circlips-ext. Ø28	1
4	**01 01 910 107**	Lock washer	1
5	**01 01 910 108**	Primary shaft nut	1
6	**01 00 599 032**	Shim 61x49x0.5	1
7	**01 00 103 012**	Bearing NU-1007 ECP	1
8	**01 01 910 103**	Bearing inner race NU-1007	1
9	**33 80 132 424**	Gear ratio 7 (24x24)	1
	33 80 132 120	Gear ratio 7 (21x20)	1
10	**01 01 910 102**	Spacer-Primary shaft	2
11	**33 80 132 628**	Gear ratio 6 (26x28)	1
12	**33 80 131 619**	Gear ratio 5 (16x19)	1
13	**33 80 131 622**	Gear ratio 4 (16x22)	1
14	**33 80 131 423**	Gear ratio 3 (14x23)	1
15	**10 80 131 224**	Gear ratio 2 (12x24)	1
16	**10 80 191 232**	Gear ratio 1 (12x32)	1
17	**01 09 024 005**	Stop NU2205	1
18	**01 01 910 105**	Primary shaft cap	1
19	**01 00 103 049**	Bearing NU-2205	1

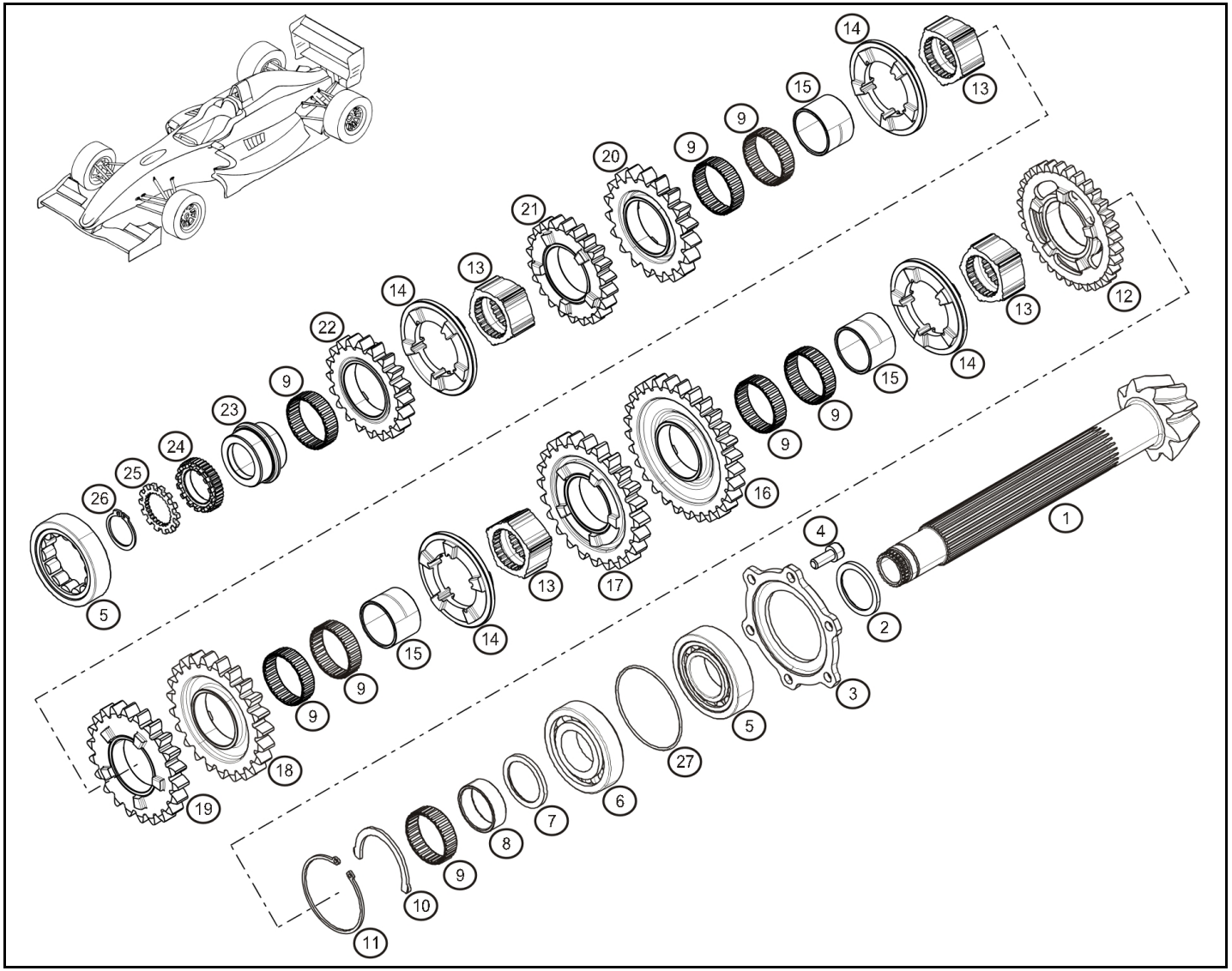

Rep.	Reference	Description	Coef
1	**93 01 910 011**	Bevel gear 9x30	1
2	**19 10 205 305**	Advance shim th. 3.05	1
	19 10 205 350	Advance shim th. 3.50	1
	19 10 205 355	Advance shim th. 3.55	1
	19 10 205 360	Advance shim th. 3.60	1
	19 10 205 365	Advance shim th. 3.65	1
	19 10 205 370	Advance shim th. 3.70	1
	19 10 205 375	Advance shim th. 3.75	1
	19 10 205 380	Advance shim th. 3.80	1
	19 10 205 385	Advance shim th. 3.85	1
	19 10 205 390	Advance shim th. 3.90	1
	19 10 205 395	Advance shim th. 3.95	1
	19 10 205 310	Advance shim th. 3.10	1
	19 10 205 400	Advance shim th. 4.00	1
	19 10 205 405	Advance shim th. 4.05	1
	19 10 205 410	Advance shim th. 4.10	1
	19 10 205 415	Advance shim th. 4.15	1
	19 10 205 420	Advance shim th. 4.20	1
	19 10 205 425	Advance shim th. 4.25	1
	19 10 205 430	Advance shim th. 4.30	1
	19 10 205 315	Advance shim th. 3.15	1
	19 10 205 320	Advance shim th. 3.20	1
	19 10 205 325	Advance shim th. 3.25	1
	19 10 205 330	Advance shim th. 3.30	1
	19 10 205 335	Advance shim th. 3.35	1
	19 10 205 340	Advance shim th. 3.40	1
	19 10 205 345	Advance shim th. 3.45	1
3	**01 01 910 203**	Bearing plate NU207 "origine"	1
	01 01 910 217	Flange NU207 "fin" ép:3.66	1
4	**01 00 301 077**	CHS Bolt M8x20 cl12.9	6
5	**01 00 103 024**	Bearing NU207 ECP	1
6	**01 01 910 216**	Bearing QJ207 C2	1
7	**01 19 102 123**	Jeu de cales (de 3.75 à 4.00mm)	1
	01 19 102 122	Jeu de cales (de 3.05 à 3.30mm)	1
8	**01 01 910 206**	Bush for needle bearing K40x45x13	1
9	**01 00 105 066**	K needle bearing 40x45x13	8
10	**01 01 910 213**	Rotation stopping fork	1
11	**01 01 910 214**	Circlips	1
12	**01 01 910 250**	Reverse gear wheel	1
13	**01 01 910 202**	Switch mounting	4
14	**01 01 910 201**	Sliding ring	4
15	**01 01 910 204**	Smooth bush	3

juil.-2013

RENAULT SPORT

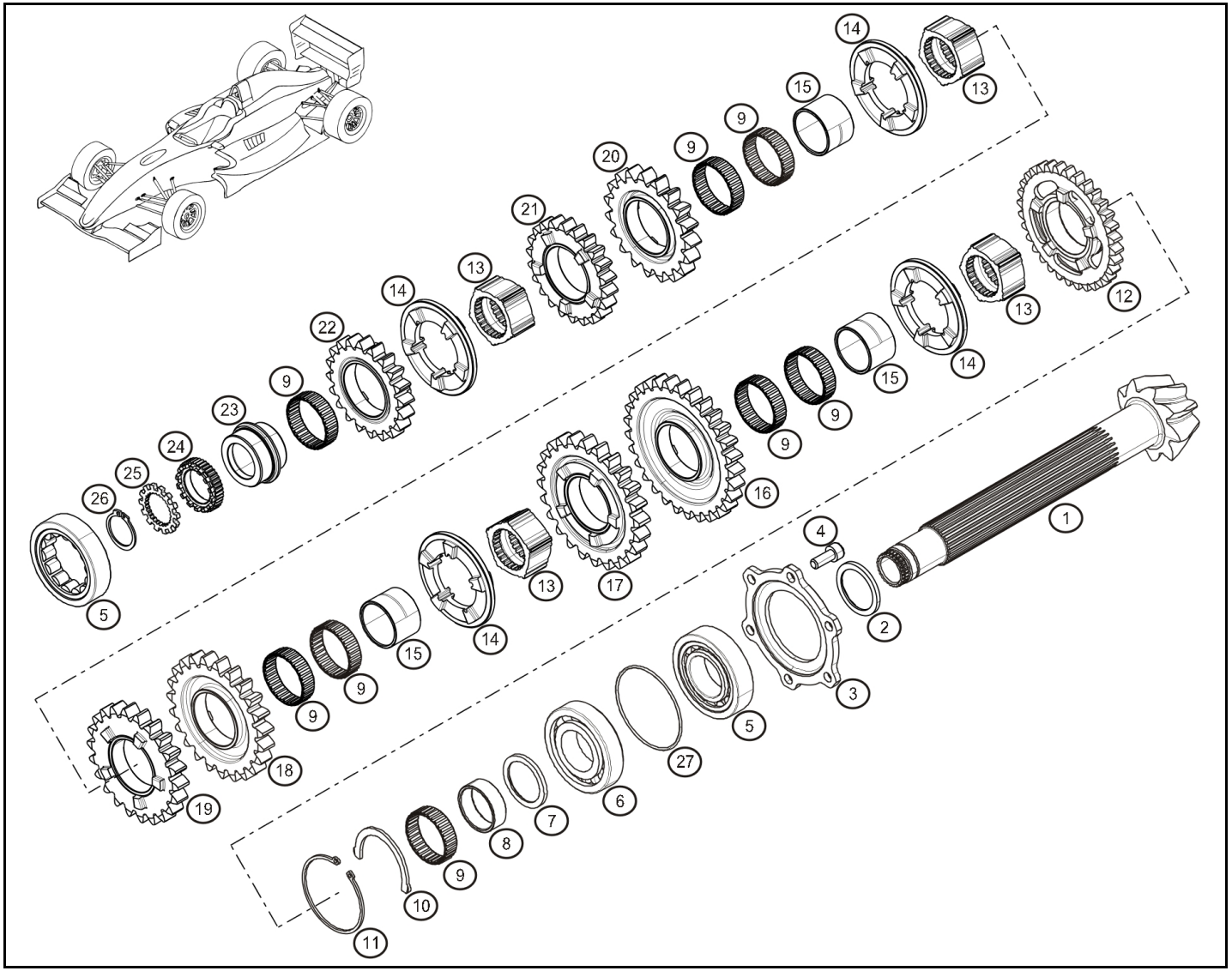

Rep.	Reference	Description	Coef
16	**10 80 191 232**	Gear ratio 1 (12x32)	1
17	**10 80 131 224**	Gear ratio 2 (12x24)	1
18	**33 80 131 423**	Gear ratio 3 (14x23)	1
19	**33 80 131 622**	Gear ratio 4 (16x22)	1
20	**33 80 131 619**	Gear ratio 5 (16x19)	1
21	**33 80 132 628**	Gear ratio 6 (26x28)	1
22	**33 80 132 424**	Gear ratio 7 (24x24)	1
	33 80 132 120	Gear ratio 7 (21x20)	1
23	**01 01 910 209**	Inner race NU207	1
24	**01 01 910 210**	Secondary shaft nut	1
25	**01 01 910 211**	Lock washer	1
26	**01 00 601 005**	Circlips-ext. Ø28	1
27	**01 00 202 061**	O ring Ø67.6x2.4	1

juil.-2013

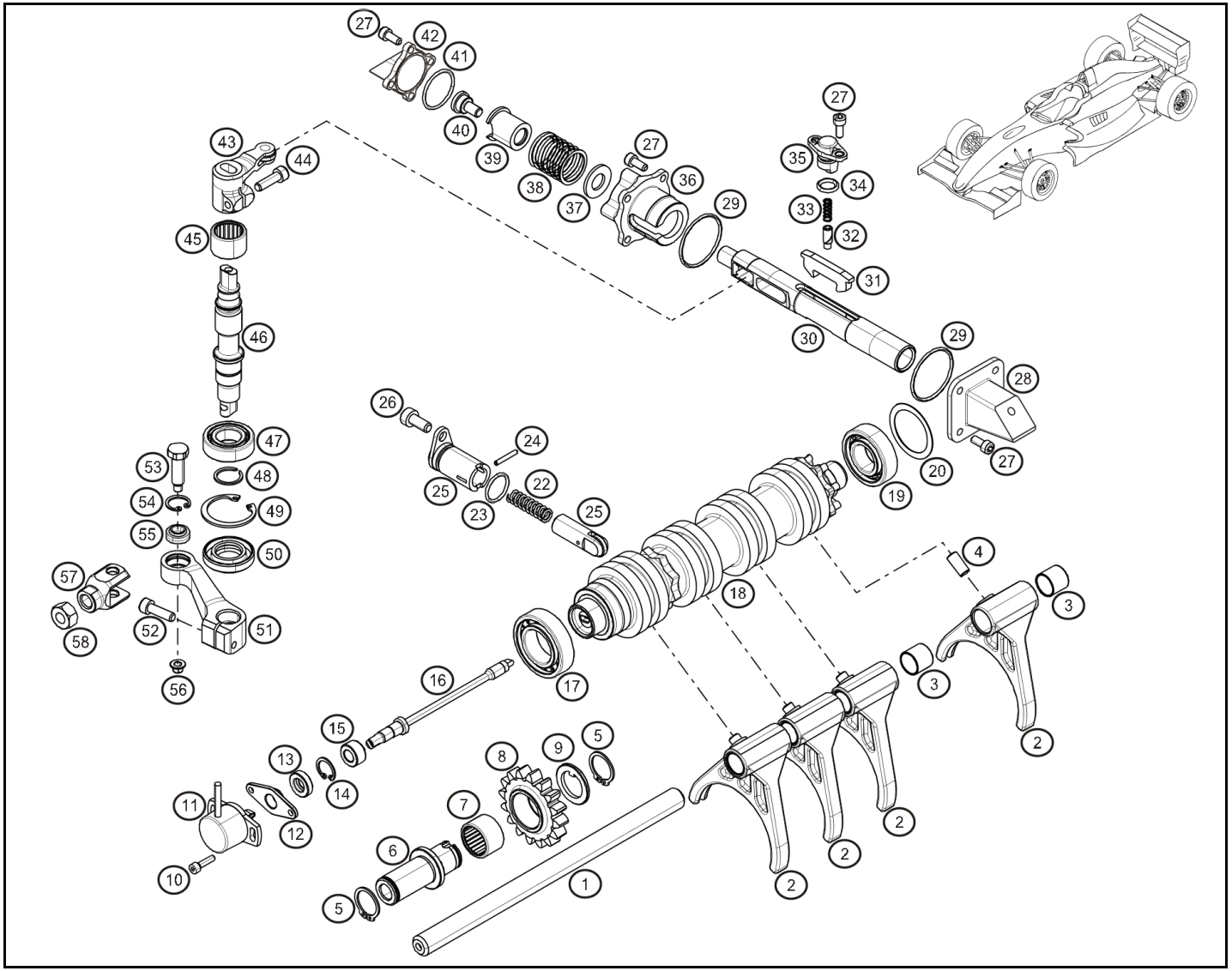

Rep.	Reference	Description	Coef
1	**01 01 910 408**	Fork rod	1
2	**01 19 104 171**	Complete fork	4
3	**01 01 202 021**	PAP Permaglide bush 1515 P10	2
4	**01 00 077 120**	Gear lever	3
5	**01 00 601 001**	Circlips-Exterior ø20mm	1
6	**01 01 910 419**	Pivot pin-Reverse lever	1
7	**01 00 106 021**	Needle roller bearing HK2016	1
8	**01 19 102 591**	Complete reverse gear pinion	1
9	**01 01 910 420**	Reverse gear washer	1
10	**01 00 301 148**	CHS Bolt M4x16 cl.8.8 Bichro	2
11	**77 11 166 101**	Barrel potentiometer	1
12	**01 01 910 412**	Potentiometer support	1
13	**01 00 203 017**	Lip seal Ø8x18x5	1
14	**01 00 602 045**	Internal snap ring Ø16	1
15	**01 01 910 411**	Potentiometer axle bush	1
16	**01 01 910 410**	Potentiometer axle	1
17	**01 00 101 050**	Ball bearing 6005	1
18	**01 01 910 427**	Barrel assembled	1
19	**01 00 101 004**	Ball bearing 6004	1
20	**01 00 599 037**	Shim 0.1mm	1
22	**01 00 801 040**	Indexor spring	1
23	**01 00 201 020**	O ring Ø16x2	1
24	**01 00 701 069**	Pin Ø2.5x18	1
25	**01 90 030 404**	Barrel kit	1
26	**01 00 301 373**	CHS Bolt M7x16 cl 10.9 brut zn	1
27	**01 00 301 138**	CHS Bolt M5x12 ZN Cl 10.9	14
28	**77 11 166 791**	Fixation D tirant sur BV	1
29	**01 00 201 105**	O ring Ø2x36	2
30	**01 01 910 403**	Selecting rod	1
31	**01 01 910 404**	Double ratchet	1
32	**01 00 059 027**	Dual pin rock pusher	1
33	**01 00 801 026**	Dual rocker spring	1
34	**01 00 201 017**	O ring Ø10x2.5	1
35	**01 14 044 031**	Dual pin rock pusher kit	1
36	**01 01 910 405**	Selector closing block	1
37	**01 00 059 049**	Thrust washer	1
38	**01 00 801 027**	Selector spring	1
39	**01 00 059 022**	Shouldered bush	1
40	**01 00 059 021**	Selector bolt	1
41	**01 00 201 021**	O ring Ø2x26	1
42	**77 11 166 790**	Fixation G tirant sur BV	1
43	**01 19 104 301**	Complete upper rocker	1
44	**01 00 301 007**	CHS Bolt M6-20	1

janv.-2013

RENAULT SPORT

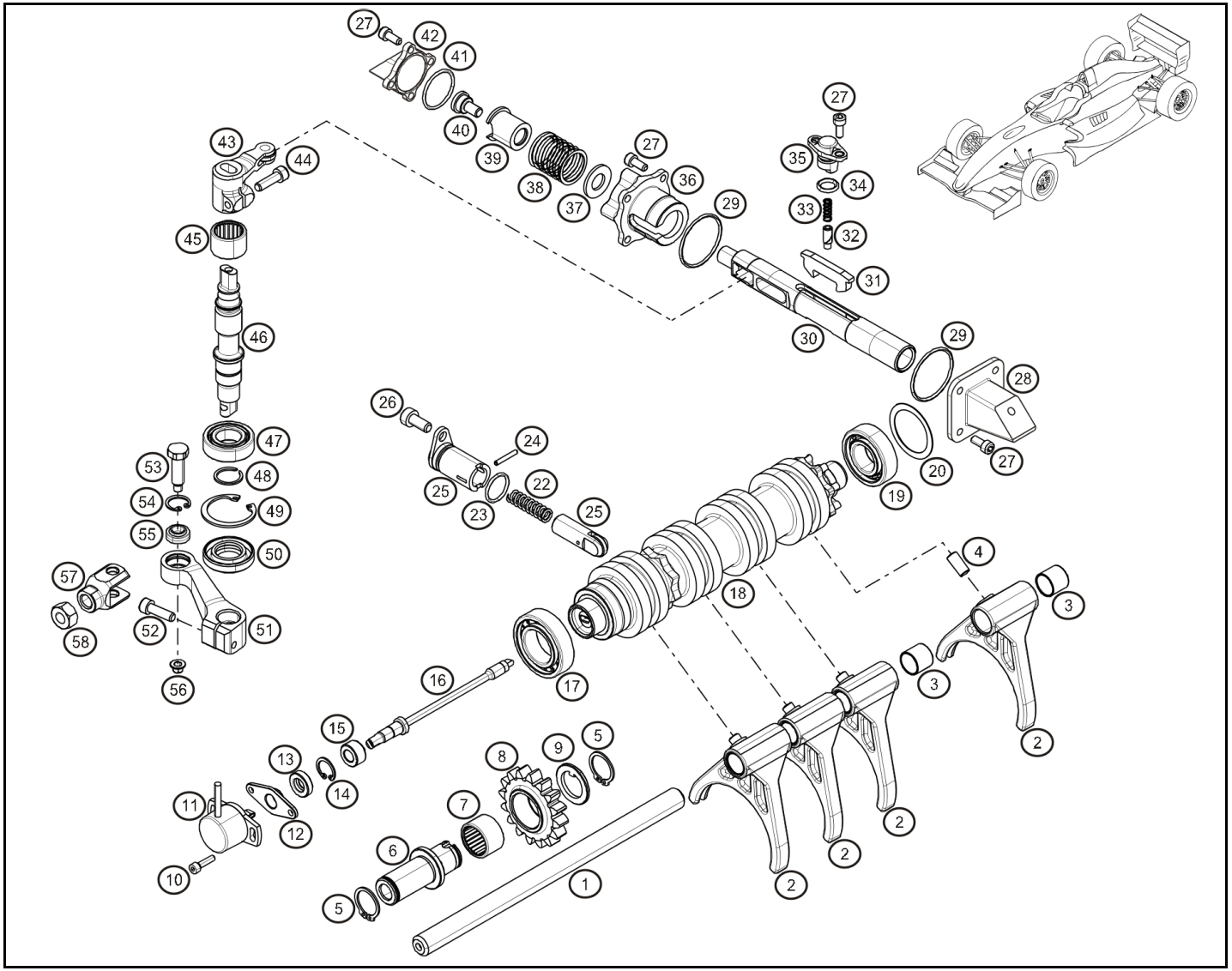

Rep.	Reference	Description	Coef
45	**01 00 106 001**	Socket HK1816	1
46	**01 01 910 429**	Rocker axle	1
47	**01 00 101 071**	Bearing 6003	1
48	**01 09 907 010**	Snap ring Ø17	1
49	**01 00 602 015**	Internal snap ring Ø35	1
50	**01 00 205 103**	Double lip seal Ø17xØ35x7	1
51	**01 19 104 311**	Complete lower rocker	1
52	**01 00 301 276**	CHS Bolt M6 lg25 Cl8.8 Zn	1
53	**01 01 910 425**	Screw	1
54	**01 09 907 058**	Seeger ring SB16	1
55	**01 00 901 004**	Radial bearing Ø8	1
56	**01 00 499 010**	Nut-SIMMONDS M6	1
57	**01 01 910 426**	Actuator axle link	1
58	**01 00 403 031**	nut HM M10x100 Zn	1

janv.-2013

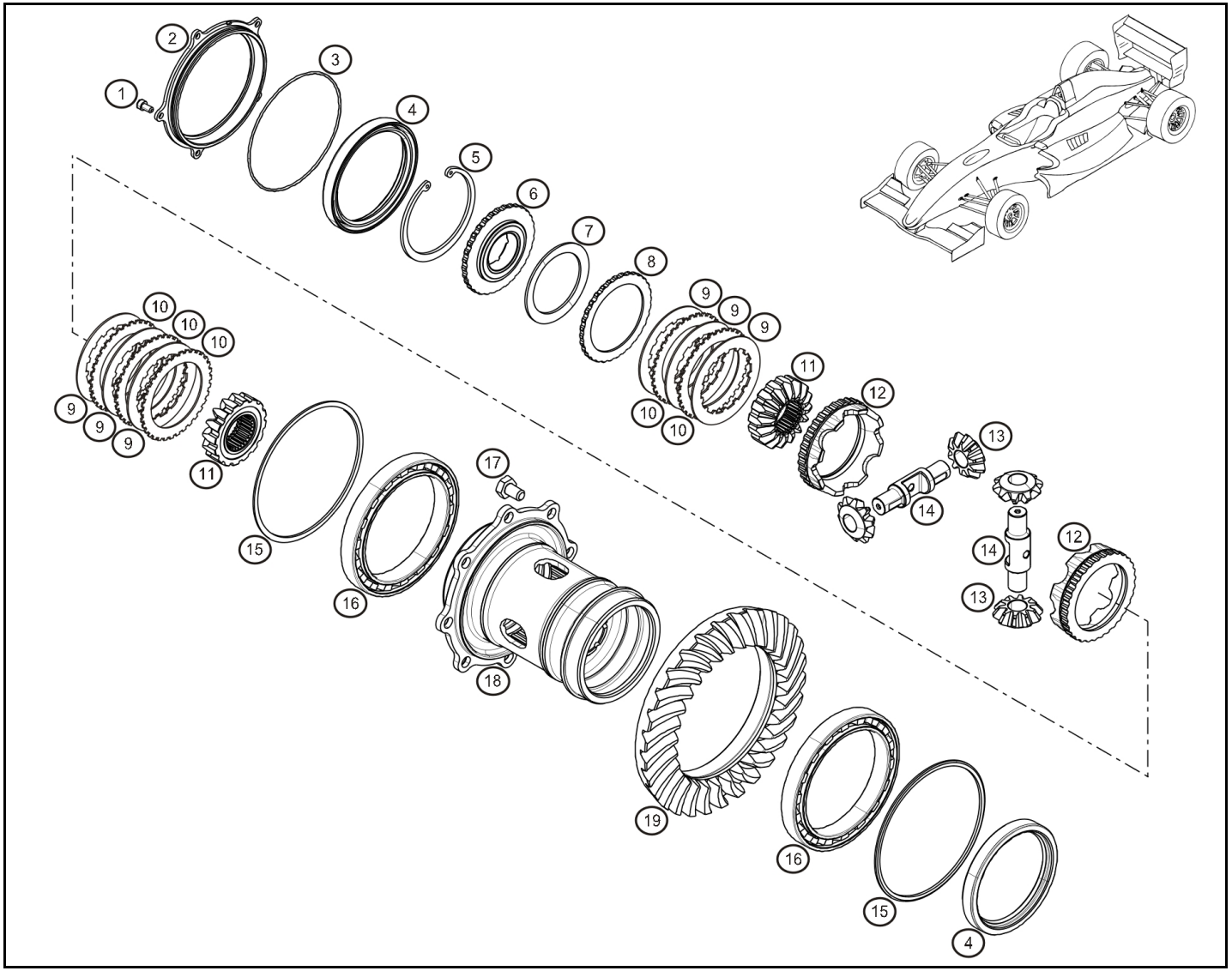

Rep.	Reference	Description	Coef
1	**01 00 301 394**	CHS Bolt M5x10 cl8.8 ZN	5
2	**01 01 910 311**	Seal plate	1
3	**01 00 201 166**	O ring Ø2xØ109	1
4	**01 00 204 041**	Lipseal 85x105x12	2
5	**01 00 602 025**	Internal snap ring Ø85mm	1
6	**01 01 910 305**	Differential cover plate	1
7	**01 01 910 313**	Belleville washer F=0.8	1
	01 01 910 314	Belleville washer F=1	1
8	**01 91 030 742**	Belleville cage ép:4.2	1
	01 91 030 743	Belleville cage ép:4.3	1
	01 91 030 744	Belleville cage ép:4.4	1
9	**01 01 910 308**	Friction disc ep1.75mm	6
10	**01 01 910 309**	Smooth disc 1.75mm	5
11	**01 01 910 310**	Sun wheel	2
12	**01 19 103 211**	Differential plate set (70°/65°)	1
13	**01 00 085 908**	Planet gear	4
14	**01 01 910 306**	Differential pinion shaft	2
15	**19 10 320 210**	Tooth clearance shim th. 2.10	1
	19 10 320 255	Tooth clearance shim th. 2.55	1
	19 10 320 260	Tooth clearance shim th. 2.60	1
	19 10 320 265	Tooth clearance shim th. 2.65	1
	19 10 320 270	Tooth clearance shim th. 2.70	1
	19 10 320 275	Tooth clearance shim th. 2.75	1
	19 10 320 280	Tooth clearance shim th. 2.80	1
	19 10 320 285	Tooth clearance shim th. 2.85	1
	19 10 320 290	Tooth clearance shim th. 2.90	1
	19 10 320 295	Tooth clearance shim th. 2.95	1
	19 10 320 300	Tooth clearance shim th. 3.00	1
	19 10 320 215	Tooth clearance shim th. 2.15	1
	19 10 320 305	Tooth clearance shim th. 3.05	1
	19 10 320 310	Tooth clearance shim th. 3.10	1
	19 10 320 315	Tooth clearance shim th. 3.15	1
	19 10 320 320	Tooth clearance shim th. 3.20	1
	19 10 320 325	Tooth clearance shim th. 3.25	1
	19 10 320 330	Tooth clearance shim th. 3.30	1
	19 10 320 335	Tooth clearance shim th. 3.35	1
	19 10 320 340	Tooth clearance shim th. 3.40	1
	19 10 320 220	Tooth clearance shim th. 2.20	1
	19 10 320 225	Tooth clearance shim th. 2.25	1
	19 10 320 230	Tooth clearance shim th. 2.30	1
	19 10 320 235	Tooth clearance shim th. 2.35	1
	19 10 320 240	Tooth clearance shim th. 2.40	1
	19 10 320 245	Tooth clearance shim th. 2.45	1

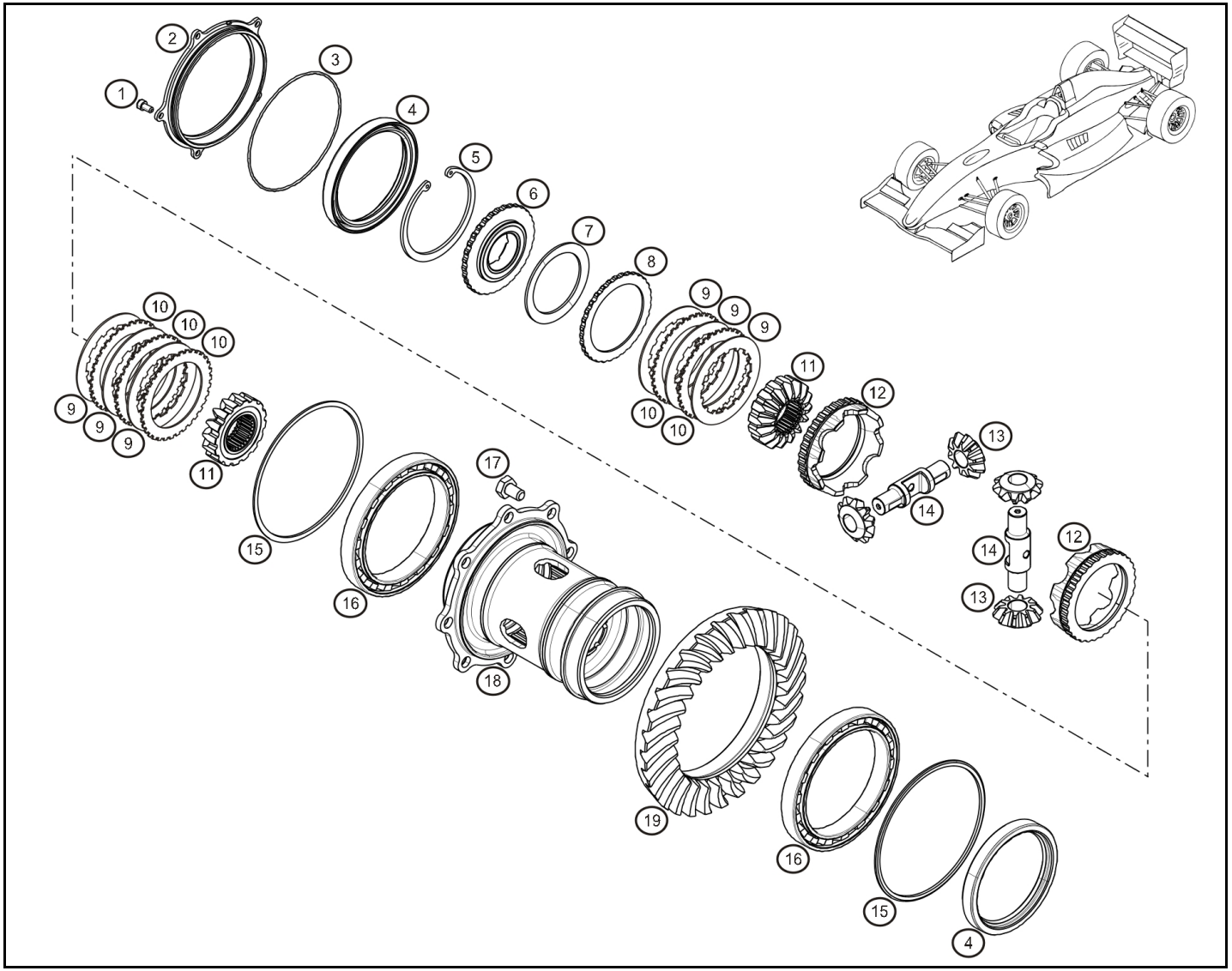

Rep.	Reference	Description	Coef
	19 10 320 250	Tooth clearance shim th. 2.50	1
16	**01 00 101 054**	Ball bearing	1
17	**01 00 305 098**	H Bolt M10x100 lg.16 cl 12.9	8
18	**01 01 910 300**	Housing-limited slip differential	1
19	**93 01 910 011**	Bevel gear 9x30	1

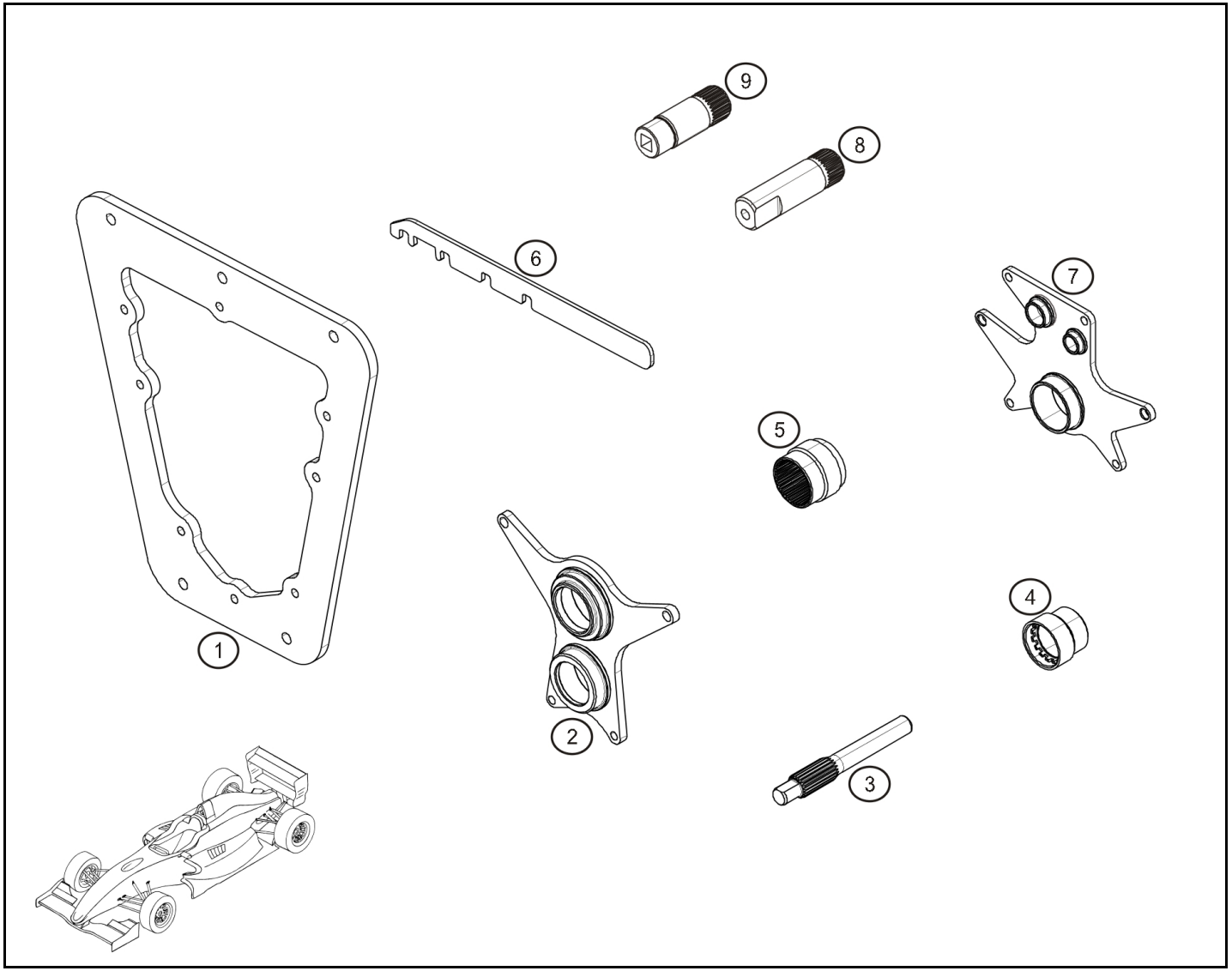

Rep.	Reference	Description	Coef
1	**66 61 910 000**	Plaque de montage de boite	1
2	**66 61 910 007**	Plaque anti-écartement	1
3	**66 61 910 100**	Centreur d'embrayage	1
4	**66 61 910 110**	Douille d'écrou de primaire	1
5	**66 69 003 021**	Douille d'écrou de secondaire	1
6	**66 61 910 400**	Peigne à fourchettes	1
7	**66 61 910 405**	Outillage de controle de selection	1
8	**66 69 004 604**	Demi arbre coté D	1
9	**66 69 004 606**	Demi arbre coté G	1

juil.-2013

RENAULT SPORT

RENAULT

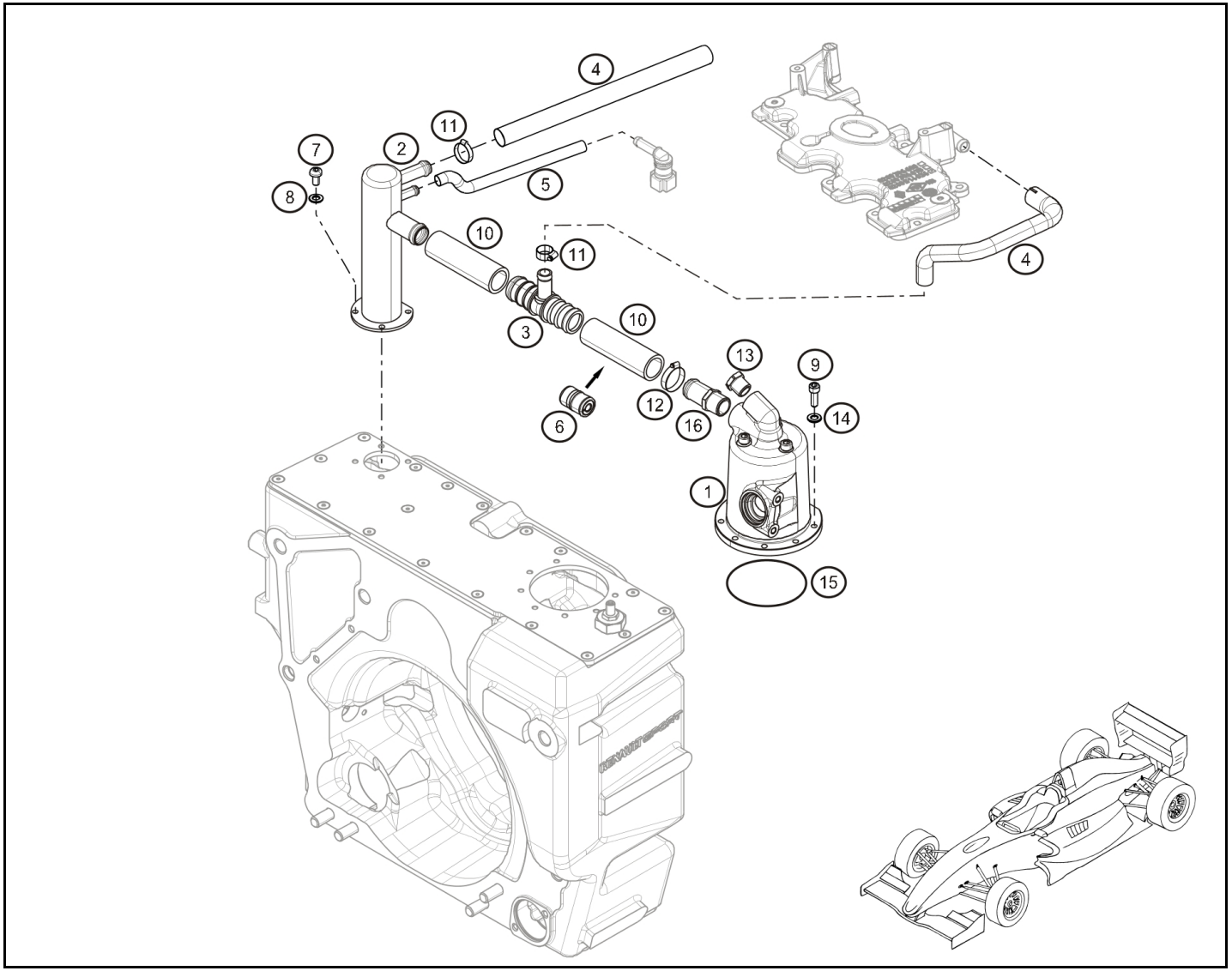

Rep.		Reference	Description	Coef
1		**77 11 166 079**	Swirl pot	1
2	®	**77 11 166 282**	Catch tank bonnet	1
3		**77 11 166 884**	T pour durite après vortex	1
4		**77 11 166 284**	Breather pipe	1
5		**77 11 166 365**	Gearbox air breather pipe	1
6		**07 11 166 879**	Clapet de bache	1
7		**77 11 156 958**	Vis CBHC M5-10	4
8		**77 11 154 878**	Washer Ø5	4
9		**77 11 162 233**	CHS Bolt M5-15	7
10		**00 11 166 283**	Manchon droit Ø16 lg:85	2
11		**77 11 166 357**	Clamp Ø16	1
12		**77 01 407 061**	Collier serrage Ø16-27	1
13		**77 11 166 885**	Bouchon vortex	1
14		**77 11 166 886**	Copper washer Ø5	7
15		**77 11 166 078**	Joint vortex viton 75x1.5	1
16		**77 11 166 093**	Raccord vortex	1

2.0

FORMULA RENAULT 2.0

29.00

Rep.		Reference	Description	Coef
1		**01 09 908 014**	Vee ring 28	2
2		**01 19 107 001**	Complete flange	2
3		**01 01 910 706**	Driveshaft stop	2
4		**77 11 166 717**	Tripod grease	1
5		**77 11 129 526**	Tripode	2
6		**01 00 201 106**	O ring Ø86x3	2
7		**01 01 910 705**	Boot mounting	2
8		**77 11 154 167**	Gaitor	2
9		**01 01 910 702**	Seal mounting plate	2
10		**01 00 303 062**	FHS Bolt M5x16 cl.10	6
11		**01 00 301 490**	CHS Bolt M5x25 cl.8	6
12	®	**77 11 166 090**	Driveshaft	2
13		**77 11 154 150**	Drivershaft joint	2
14		**77 11 166 144**	Driveshaft preload spring	2
15		**77 11 154 175**	Kit soufflet coté roue	2
16		**77 03 066 085**	Circlips Ø24	2
17		**77 11 127 025**	Grease	1
18		**01 19 107 051**	Complete boot mounting	2

avr.-2015

RENAULT SPORT

RENAULT

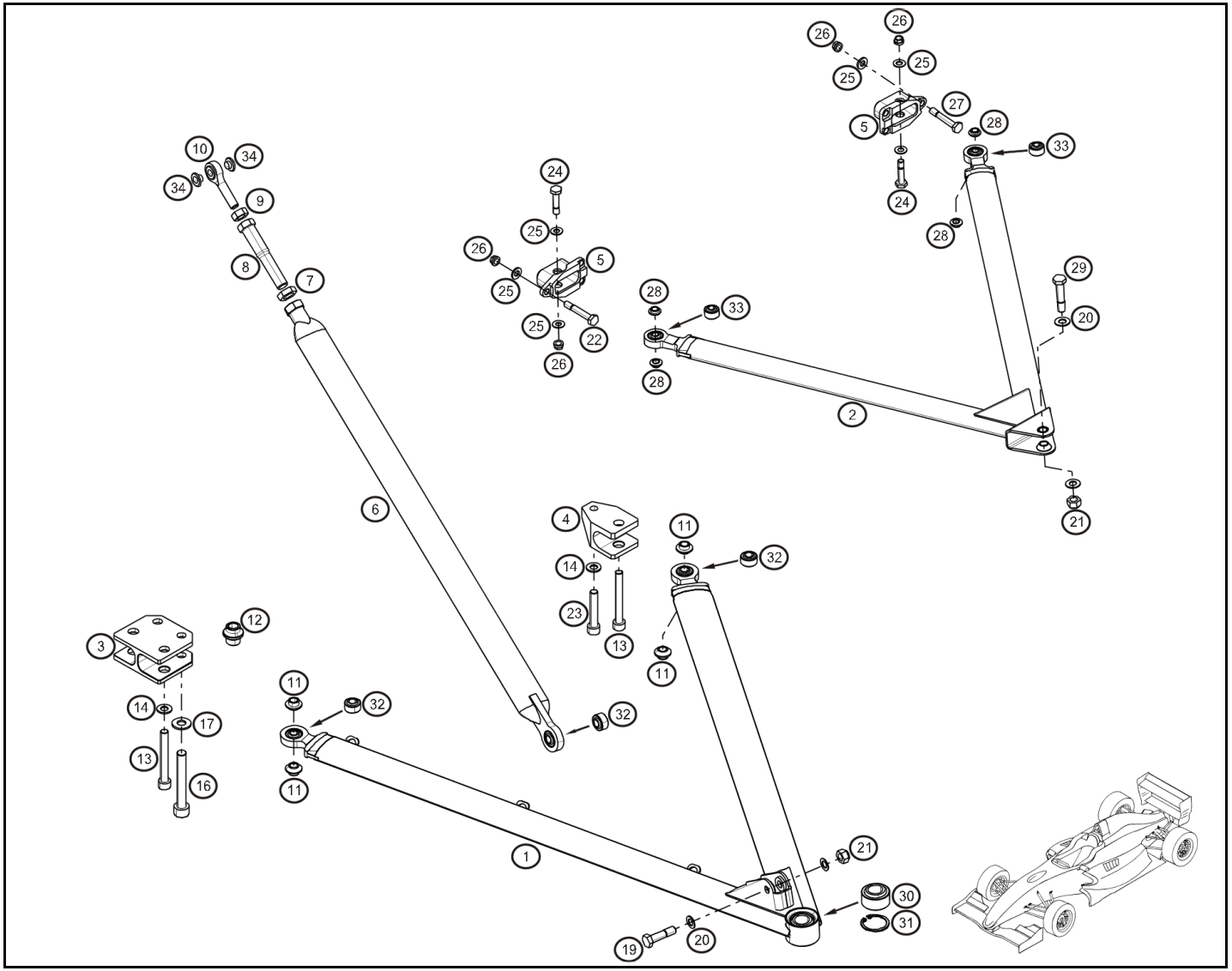

Rep.		Reference	Description	Coef
1	®	**77 11 166 241**	LH Front lower wishbone	1
	®	**77 11 166 242**	RH Front lower wishbone	1
2	®	**77 11 166 243**	Front top wishbone	2
3	®	**77 11 166 244**	Front lower wishbone front bracket	1
4	®	**77 11 166 245**	Front lower wishbone rear bracket	2
5	®	**77 11 166 246**	Front top wishbone bracket	4
6	®	**77 11 166 250**	Front pushrod	2
7		**77 11 166 386**	Nut-Thin 1/2 "pas à Gauche"	2
8	®	**77 11 166 835**	Regleur de push AV long	2
9		**77 11 166 385**	Nut-Thin 3/8	2
10		**77 11 166 254**	Push	2
11		**77 11 166 248**	Front lower wishbone bearing bush	8
12		**77 11 166 249**	Entretoise cable sécurité AV	2
13		**77 11 166 878**	CHS Bolt M8-50 cl:12.9 (recoupé)	4
14		**77 11 154 791**	Washer	4
16		**77 11 064 819**	CHS Bolt M10-50	2
17		**77 11 154 909**	Washer	4
19		**77 11 166 187**	NAS bolt 1305-14	2
20		**77 11 166 367**	NAS T washer 5/16	4
21		**77 11 166 372**	Locknut 5/16	2
22		**77 11 159 447**	NAS bolt 1304-19	6
23		**77 11 156 928**	CHS Bolt M8x125-30	2
24		**77 11 166 181**	NAS bolt 1104-13	1
25		**77 11 166 366**	NAS T washer 1/4	1
26		**77 11 166 375**	UNF nut 1/4	1
27		**77 11 154 700**	Screw AN4-14A	6
28		**77 11 166 247**	Front top wishbone bearing bush	8
29		**77 11 165 096**	NAS bolt 1305-16	2
30		**77 11 159 591**	Rod end bearing	2
31		**77 11 068 418**	Anneau invérsé Ø30	2
32		**77 11 159 445**	Rod end bearing	1
33		**00 11 166 243**	Rod end bearing	1
34		**77 11 166 272**	Rod end spacer	2

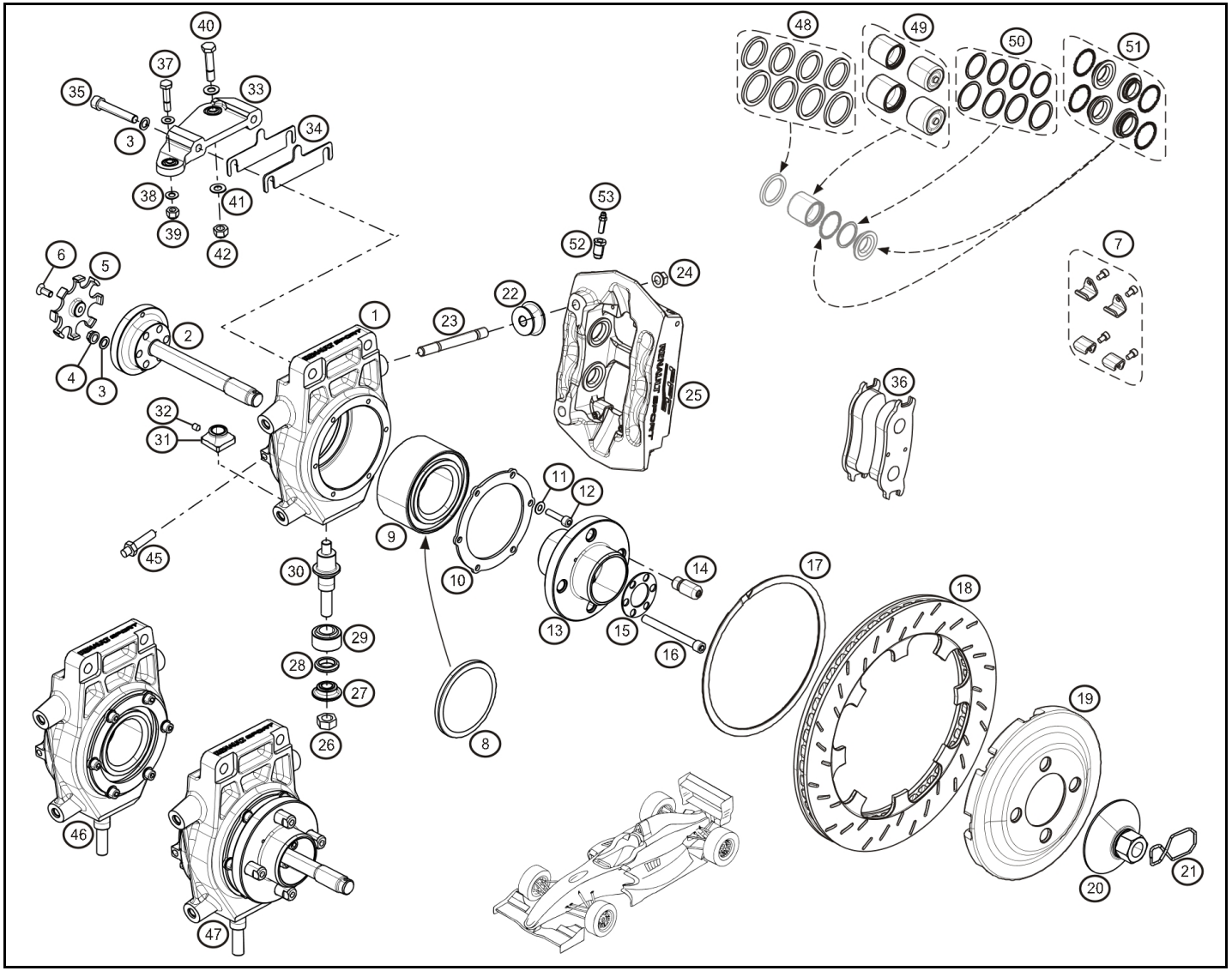

Rep.		Reference	Description	Coef
1	®	**77 11 166 201**	Upright	2
2	®	**77 11 166 764**	Left threaded front hub axle	1
	®	**77 11 166 202**	Front hub axle	1
3		**77 11 126 887**	Washer SPS Ø8	4
4		**77 11 166 376**	UNF nut 5/16	2
5	®	**77 11 166 203**	Front wheel speed trigger	2
6		**77 11 166 177**	FHS Bolt M6-15	2
7		**77 11 166 915**	Kit butée de plaquettes PFC	2
8		**07 11 166 008**	Joint de roulement de roue	1
9		**77 11 166 008**	Wheel bearing	2
10	®	**77 11 166 206**	Wheel bearing retaining plate	2
11		**77 11 166 368**	NAS T washer 3/8	12
12		**77 11 166 205**	CHS Bolt M6-25 Tb	4
13	®	**77 11 166 207**	Front wheel hub	2
14	®	**77 11 166 749**	Toc de roue Evo	8
15		**77 11 166 209**	Outer hub washer	2
16		**77 11 166 236**	Front hub screw	12
17		**77 11 166 908**	Clip fix. bol de Disque PFC	2
18		**77 11 166 905**	Disque G PFC	1
		77 11 166 906	Disque D PFC	1
19		**77 11 166 907**	Bol de Disque PFC	2
20		**77 11 166 213**	Wheel nut	1
		77 11 166 766	Left threaded wheel nut	1
21		**77 11 154 471**	Goupille arrêt	2
22	®	**77 11 166 227**	Caliper spacer	2
23		**77 11 166 920**	Kit Goujons + ecrous étrier frein PFC	2
24		**77 11 166 921**	Ecrou Knut M10x125	4
25		**77 11 166 901**	Etrier AVG PFC	1
		77 11 166 902	Etrier AVD PFC	1
26		**77 11 166 374**	Locknut 7/16	2
27	®	**77 11 166 219**	Upright pin bearing washer	2
28		**77 11 166 218**	Upright lower	2
29		**77 11 159 591**	Rod end bearing	2
30		**77 11 166 770**	Axe porte moyeu AV evo	2
31		**77 11 166 719**	Rear upright pin nut évo2	2
32		**77 11 166 714**	Screw Hc M6-8 pointeau	2
33	®	**77 11 166 220**	FL Ackermann	1
	®	**77 11 166 221**	FR Ackermann	1
34	®	**77 11 166 222**	Travel stop 1mm	1
	®	**77 11 166 223**	Travel stop 1.5mm	1
	®	**77 11 166 224**	Travel stop 2mm	1
	®	**77 11 166 225**	Travel stop 3mm	1

juin-2014

RENAULT SPORT

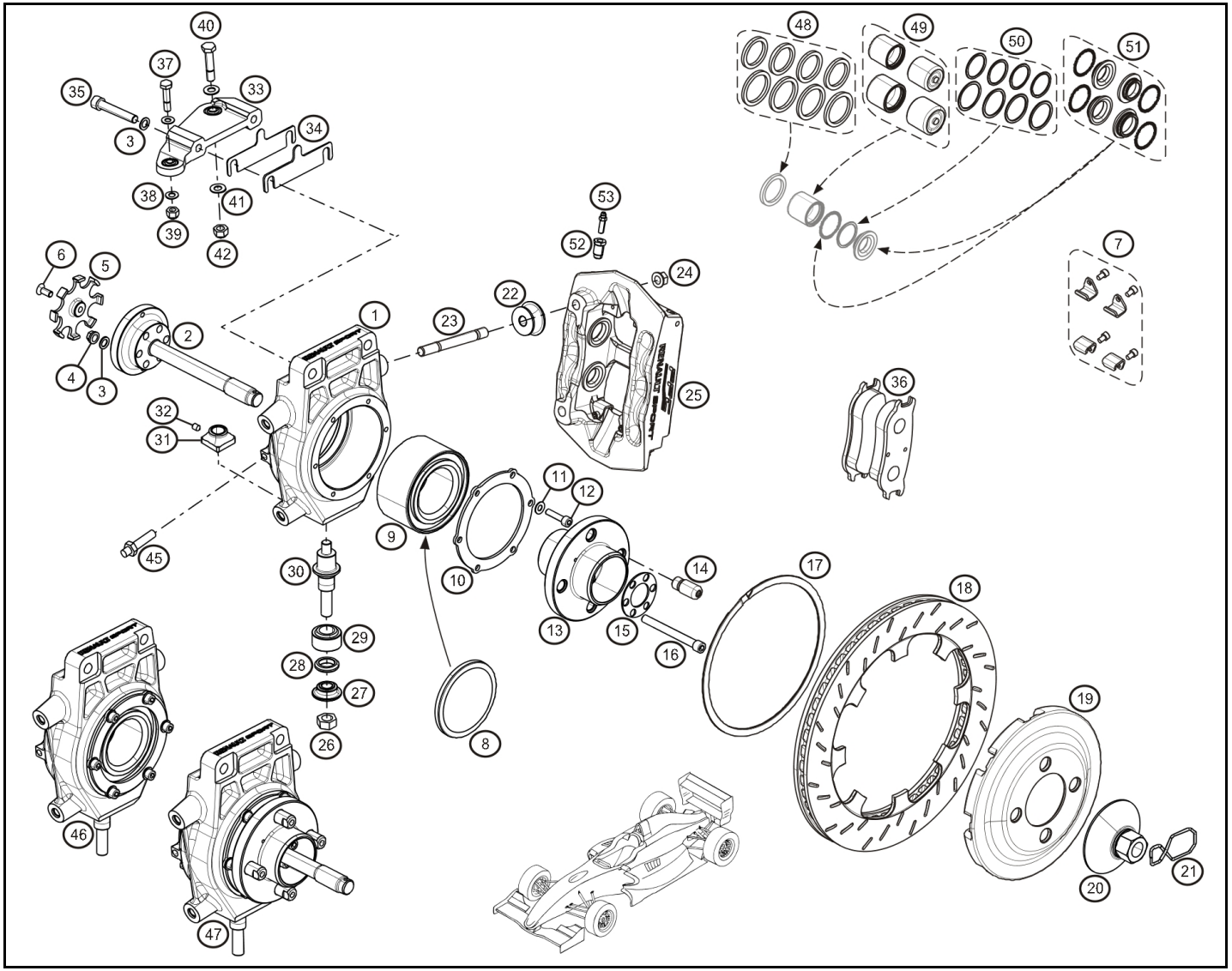

Rep.		Reference	Description	Coef
	®	**77 11 166 226**	Travel stop 5mm	1
35		**77 11 166 587**	CHS Bolt M8-50 cl:12.9	4
36		**77 11 166 909**	Plaquettes PFC 11	1
		77 11 166 910	Plaquettes PFC 13	1
37		**77 11 166 185**	NAS bolt 1304-12	1
38		**77 11 166 366**	NAS T washer 1/4	1
39		**77 11 166 371**	Locknut 1/4	2
40		**77 11 165 096**	NAS bolt 1305-16	2
41		**77 11 166 367**	NAS T washer 5/16	1
42		**77 11 166 372**	Locknut 5/16	2
45		**77 11 166 105**	Wheel speed sensor	1
46	®	**77 11 166 680**	Front upright with bearing	2
47	®	**00 11 166 682**	Upright-Front LH assembled	1
	®	**77 11 166 682**	Porte moyeu AVD assemblé	1
48		**77 11 166 912**	Kit joints piston PFC	1
49		**77 11 166 911**	Kit piston PFC	2
50		**77 11 166 914**	Kit joints isolation pistons PFC	1
51		**77 11 166 913**	Kit protections pistons PFC	2
52		**77 11 166 917**	Kit insert de vis de purge PFC	2
53		**77 11 166 916**	Kit vis de purge PFC	1

juin-2014

RENAULT SPORT

RENAULT

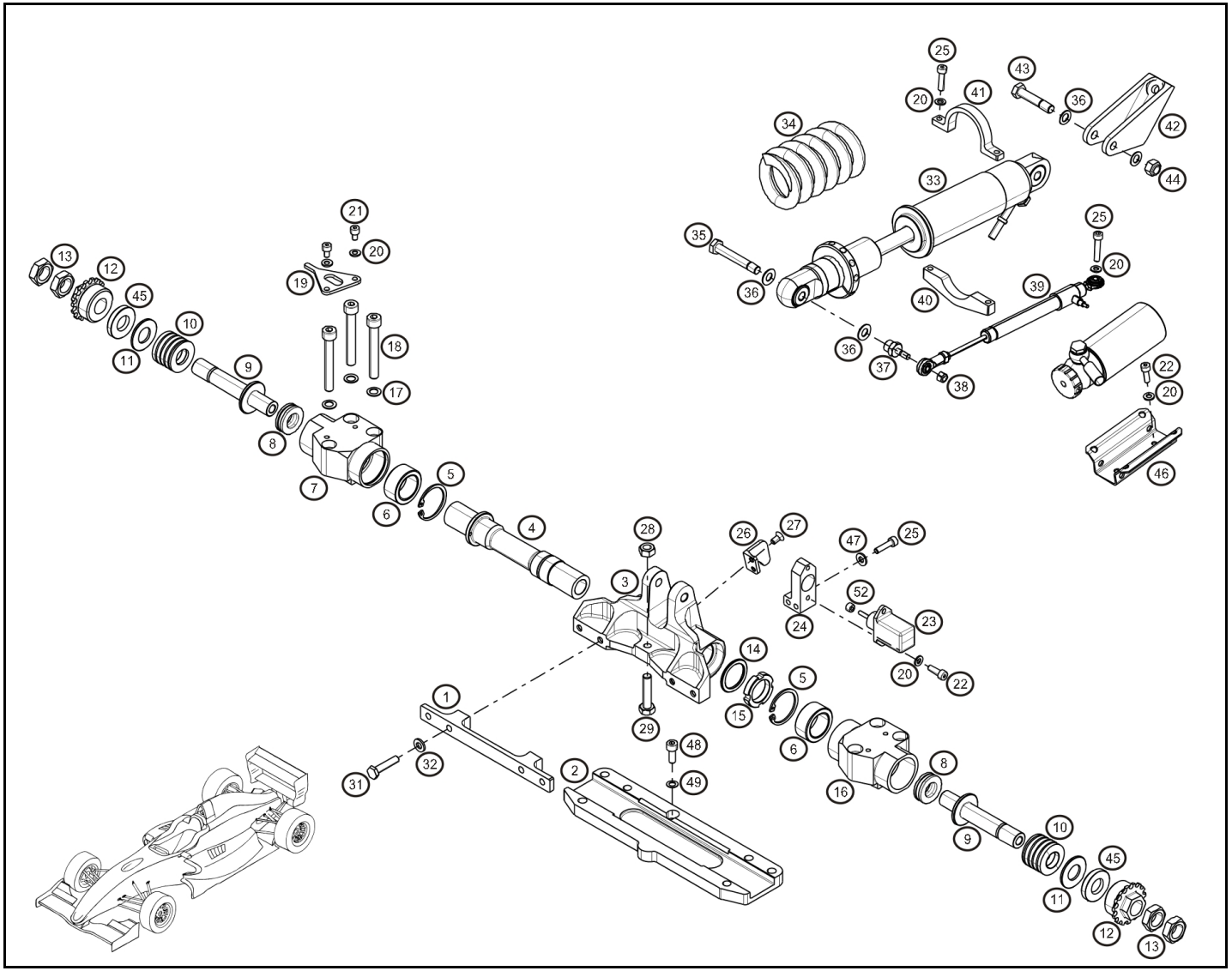

Rep.		Reference	Description	Coef
1	®	**77 11 166 500**	Front rocker push plate	1
2		**77 11 166 501**	Front rocker plate	1
3	®	**77 11 166 502**	front rocker	1
4	®	**77 11 166 503**	Front rocker axle	1
5		**77 11 166 176**	Internal snap ring Ø35	2
6		**77 11 166 535**	Front rocker bearing	2
7	®	**77 11 166 504**	LH front rocker mounting	1
8		**77 11 166 508**	Bearing	2
9		**77 11 166 509**	Belleville axle	2
10		**77 11 166 510**	belleville washers	6
11	®	**77 11 166 511**	Belleville washer	2
12	®	**77 11 166 512**	Bellevilles adjustment nut	2
13		**77 11 166 513**	Nut	4
14		**77 11 166 506**	Front axle rocker axle washer	1
15		**77 11 166 507**	Front rocker axle nut	1
16	®	**77 11 166 505**	RH front rocker mounting	1
17		**77 11 126 887**	Washer SPS Ø8	6
18		**77 11 128 929**	CHS Bolt M8-60 Cl:12.9	6
19		**77 11 166 514**	Nut stop	2
20		**77 11 154 878**	Washer Ø5	2
21		**77 11 165 627**	CHS Bolt M5-12 cl:12.9	4
22		**77 11 166 397**	CHS Bolt M5-15	2
23		**77 11 166 107**	Roll sensor	1
24		**77 11 166 515**	Roll sensor support	1
25		**77 11 158 342**	CHS Bolt M5-20 cl:12.9	2
26		**77 11 166 516**	Roll sensor bracket	1
27		**77 11 166 393**	FHS Bolt M5-10	2
28		**77 11 166 392**	nut H M8	1
29		**77 11 166 707**	Front droop screw	1
31		**77 11 166 182**	NAS bolt 1104-14	4
32		**77 11 166 369**	NAS S washer 1/4	4
33		**77 11 166 031**	Front damper	1
34		**77 11 166 040**	Spring 700	1
		77 11 166 041	Spring 800	1
		77 11 166 042	Spring 900	1
35		**77 11 166 184**	NAS bolt 1105-27	1
36		**77 11 166 370**	NAS S washer 5/16	4
37		**77 11 166 517**	Front damper potentiometer support	1
38		**77 03 034 007**	Locknut M5	1
39		**77 11 166 106**	Damper potentiometer	1
		77 11 166 759	Optional damper potentiometer	1
40	®	**77 11 166 518**	1/2 coquille inf. capteur débat	1

RENAULT SPORT

févr.-2014

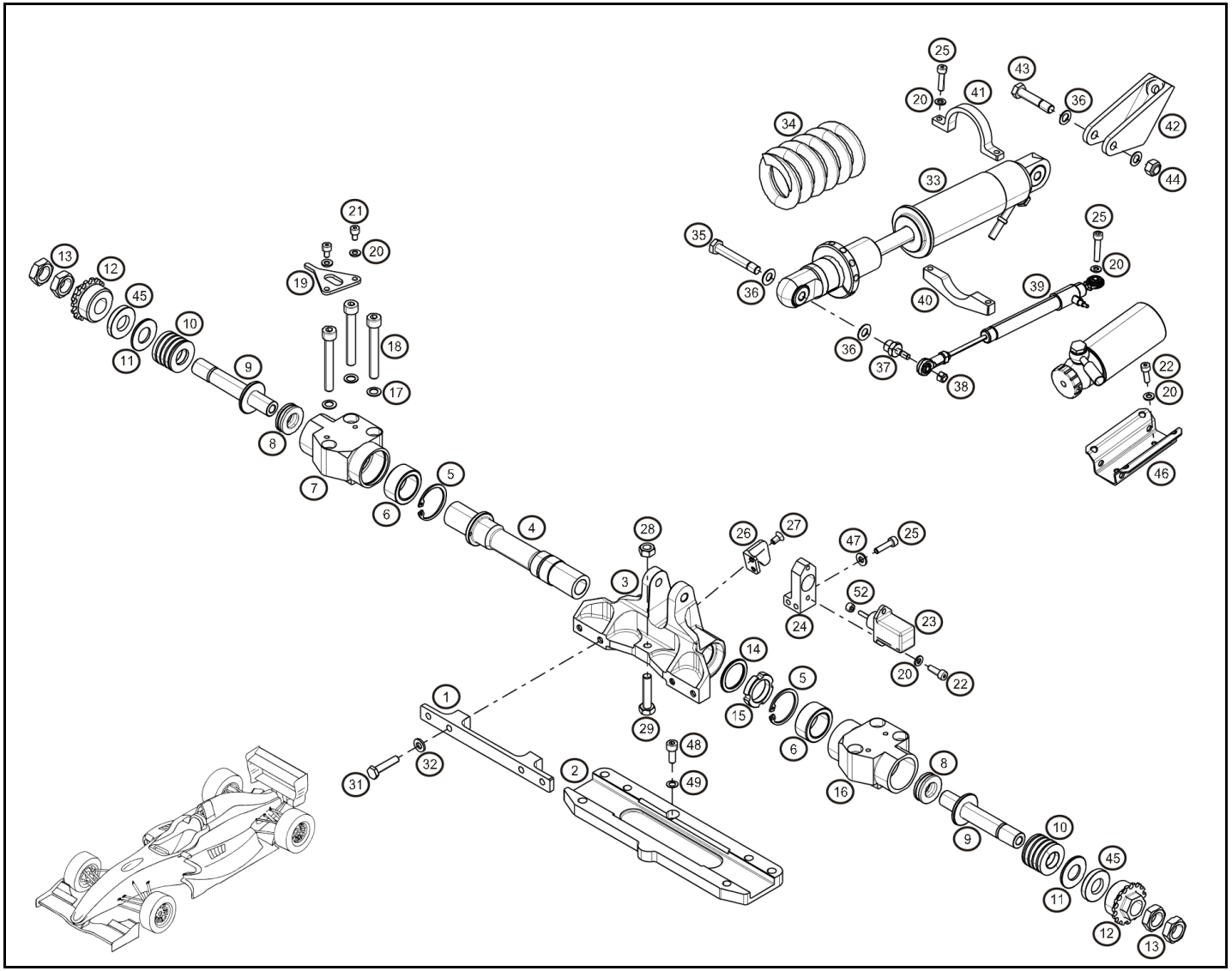

Rep.		Reference	Description	Coef
41	®	**77 11 166 519**	1/2 coquille sup. capteur débat	1
42	®	**77 11 166 521**	Front damper bracket	1
43		**77 11 166 189**	NAS bolt 1305-18	1
44		**77 11 166 372**	Locknut 5/16	1
45		**77 11 166 273**	Front rocker aluminium spacer 3mm	2
		77 11 166 274	Front rocker aluminium spacer 5mm	2
		77 11 166 275	Front rocker aluminium spacer 8mm	2
46		**77 11 166 520**	Front damper canister support	1
47		**77 11 126 780**	Washer SPS Ø5	2
48		**77 11 128 925**	CHS Bolt M6-20	1
49		**77 11 126 686**	Washer SPS Ø6	1
52		**77 11 159 495**	Plastic cap	1

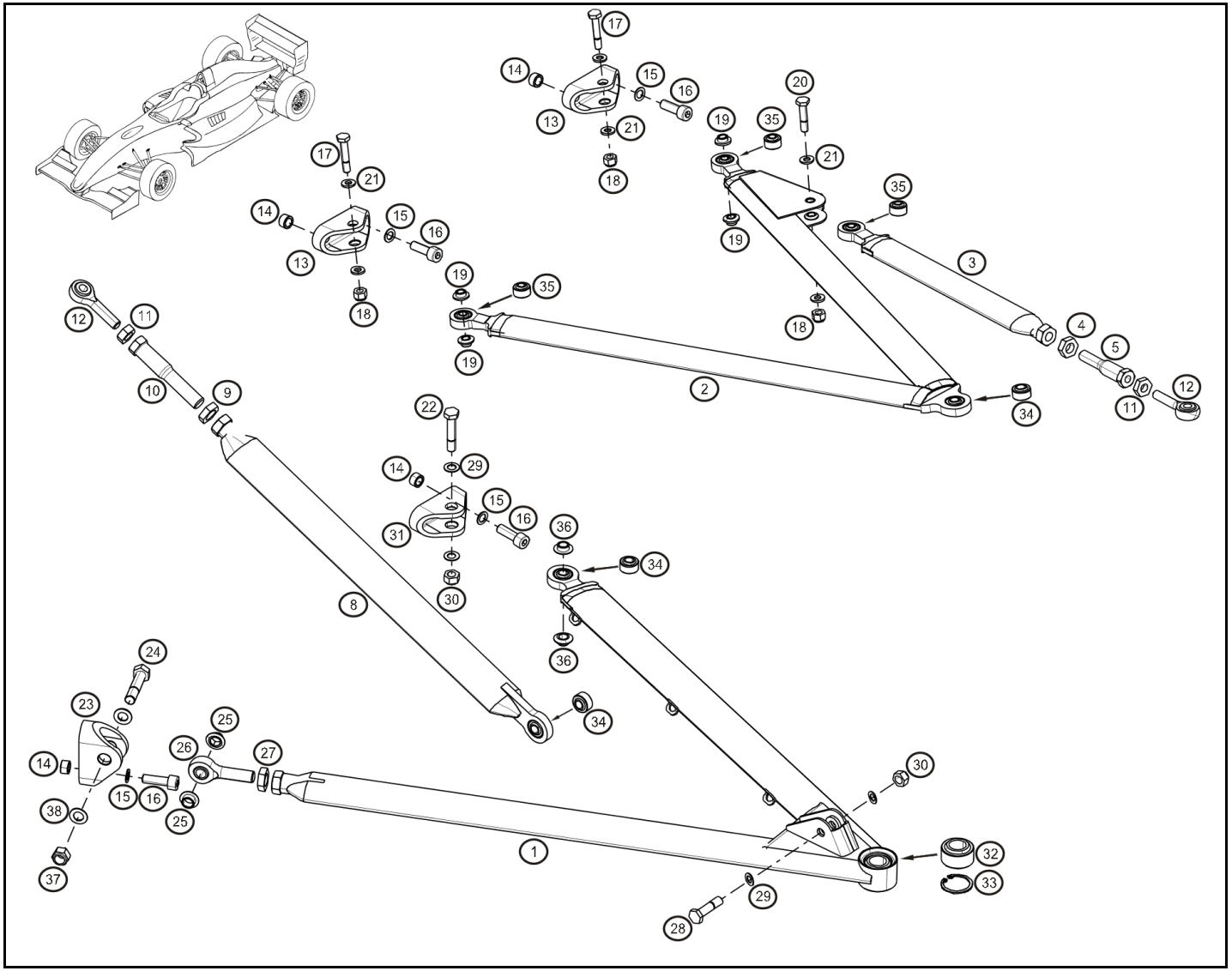

Rep.		Reference	Description	Coef
1	®	**77 11 166 256**	LH Rear lower wishbone	1
	®	**77 11 166 257**	RH Rear lower wishbone	1
2	®	**77 11 166 258**	Rear top wishbone	2
3	®	**77 11 166 259**	Rear toe rod	2
4		**77 11 166 260**	Nut	2
5	®	**77 11 166 767**	Régleur de pince AR Evo	2
8	®	**77 11 166 255**	Rear pushrod	2
9		**77 11 166 386**	Nut-Thin 1/2 "pas à Gauche"	2
10	®	**77 11 166 340**	Long pushrod adjuster	2
11		**77 11 166 385**	Nut-Thin 3/8	4
12		**77 11 166 254**	Push	4
13	®	**77 11 166 850**	Chape sup triangle AR	4
14		**77 11 166 265**	Rear wishbone bracket pin	8
15		**77 11 126 887**	Washer SPS Ø8	16
16		**77 11 153 535**	CHS Bolt M8-25	16
17		**77 11 166 877**	NAS bolt 1304-16	4
18		**77 11 166 371**	Locknut 1/4	4
19		**77 11 166 851**	Entretoise chape sup triangle AR	8
20		**77 11 166 185**	NAS bolt 1304-12	2
21		**77 11 166 366**	NAS T washer 1/4	4
22		**77 11 166 188**	NAS bolt 1305-17	2
23	®	**77 11 166 271**	Front lower wishbone front bracket	2
24		**77 11 166 191**	NAS bolt 1306-18	2
25		**77 11 166 268**	Rear lower wishbone bracket spacer	4
26		**77 11 166 269**	Rear inferior wishbone rod end	2
27		**77 11 166 387**	Nut-Thin 7/16	2
28		**77 11 166 187**	NAS bolt 1305-14	2
29		**77 11 166 367**	NAS T washer 5/16	8
30		**77 11 166 372**	Locknut 5/16	4
31	®	**77 11 166 852**	Chape inf triangle AR	2
32		**77 11 159 591**	Rod end bearing	2
33		**77 11 068 418**	Anneau invérsé Ø30	2
34		**77 11 159 445**	Rod end bearing	1
35		**00 11 166 243**	Rod end bearing	1
36		**77 11 166 853**	Entretoise chape inf triangle AR	4
37		**77 11 166 373**	Locknut 3/8 UNF	2
38		**77 11 166 368**	NAS T washer 3/8	4

févr.-2014

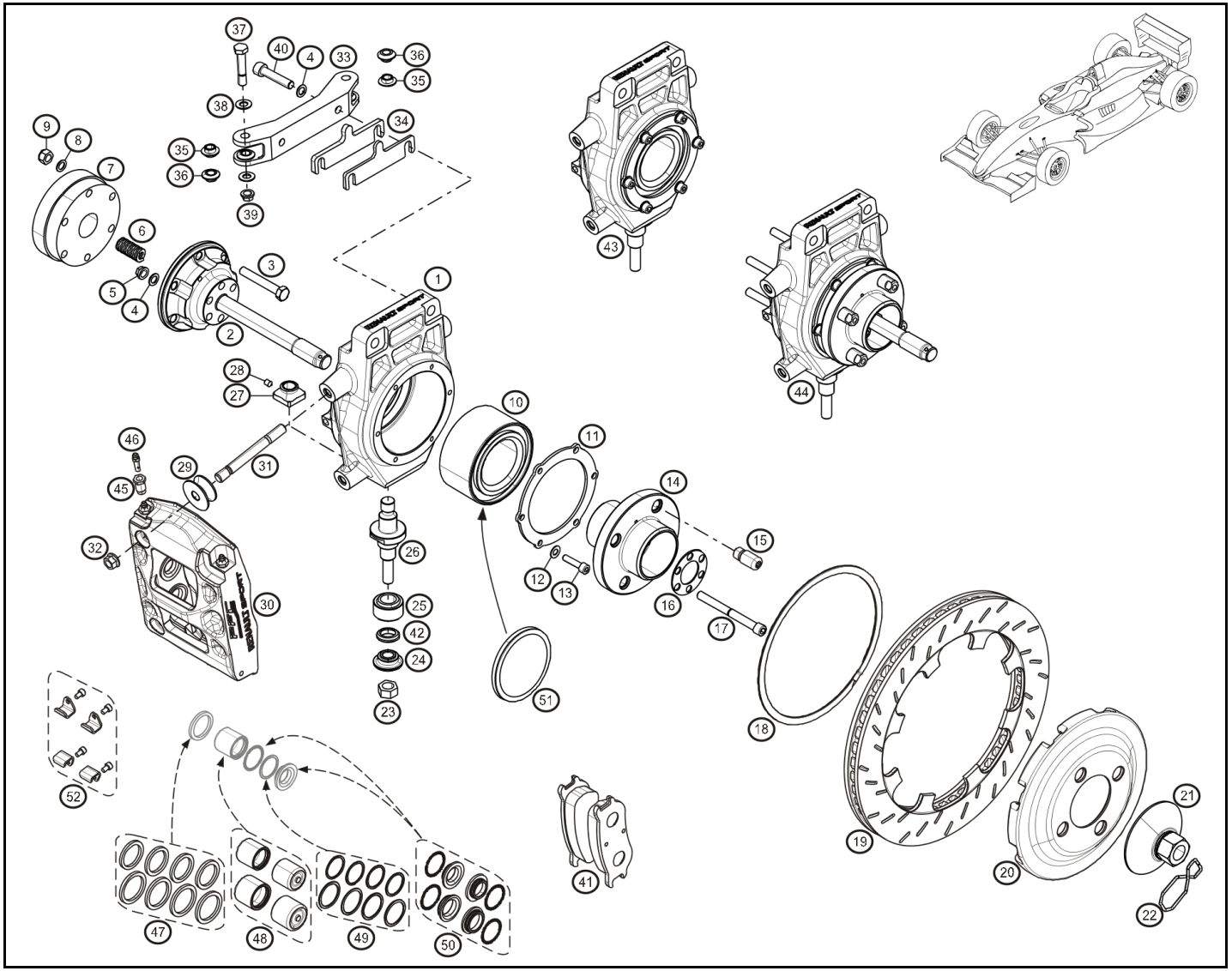

Rep.		Reference	Description	Coef
1	®	**77 11 166 201**	Upright	2
2	®	**77 11 166 229**	Rear hub axle	1
	®	**77 11 166 765**	Left threaded rear hub axle	1
3		**07 11 166 238**	Vis H modifié moyeu / lobro	12
4		**77 11 126 887**	Washer SPS Ø8	12
5		**77 11 166 376**	UNF nut 5/16	12
6		**77 11 166 144**	Driveshaft preload spring	2
7		**77 11 154 150**	Drivershaft joint	2
8		**77 11 166 370**	NAS S washer 5/16	12
9		**77 03 034 237**	Locknut M8	12
10		**77 11 166 008**	Wheel bearing	2
11	®	**77 11 166 206**	Wheel bearing retaining plate	2
12		**77 11 166 368**	NAS T washer 3/8	12
13		**77 11 166 205**	CHS Bolt M6-25 Tb	12
14	®	**77 11 166 207**	Front wheel hub	2
15	®	**77 11 166 749**	Toc de roue Evo	8
16		**77 11 166 209**	Outer hub washer	2
17		**77 11 166 237**	Rear hub screw	12
18		**77 11 166 908**	Clip fix. bol de Disque PFC	2
19		**77 11 166 905**	Disque G PFC	1
		77 11 166 906	Disque D PFC	1
20		**77 11 166 907**	Bol de Disque PFC	2
21		**77 11 166 213**	Wheel nut	1
		77 11 166 766	Left threaded wheel nut	1
22		**77 11 154 471**	Goupille arrêt	2
23		**77 11 166 374**	Locknut 7/16	2
24	®	**77 11 166 219**	Upright pin bearing washer	2
25		**77 11 159 591**	Rod end bearing	2
26		**77 11 166 718**	Rear upright axle évo2	2
27		**77 11 166 719**	Rear upright pin nut évo2	2
28		**77 11 166 714**	Screw Hc M6-8 pointeau	6
29	®	**77 11 166 227**	Caliper spacer	4
30		**77 11 166 903**	Etrier ARG PFC	1
		77 11 166 904	Etrier ARD PFC	1
31		**77 11 166 920**	Kit Goujons + ecrous étrier frein PFC	2
32		**77 11 166 921**	Ecrou Knut M10x125	4
33	®	**77 11 166 234**	RL complete Ackermann	1
	®	**77 11 166 235**	RR complete Ackermann	1
34	®	**77 11 166 224**	Travel stop 2mm	2
	®	**77 11 166 226**	Travel stop 5mm	2
35		**77 11 166 240**	Ackermann spacer 3	2
36		**77 11 166 239**	Ackermann spacer 3mm	2

juin-2014

RENAULT SPORT

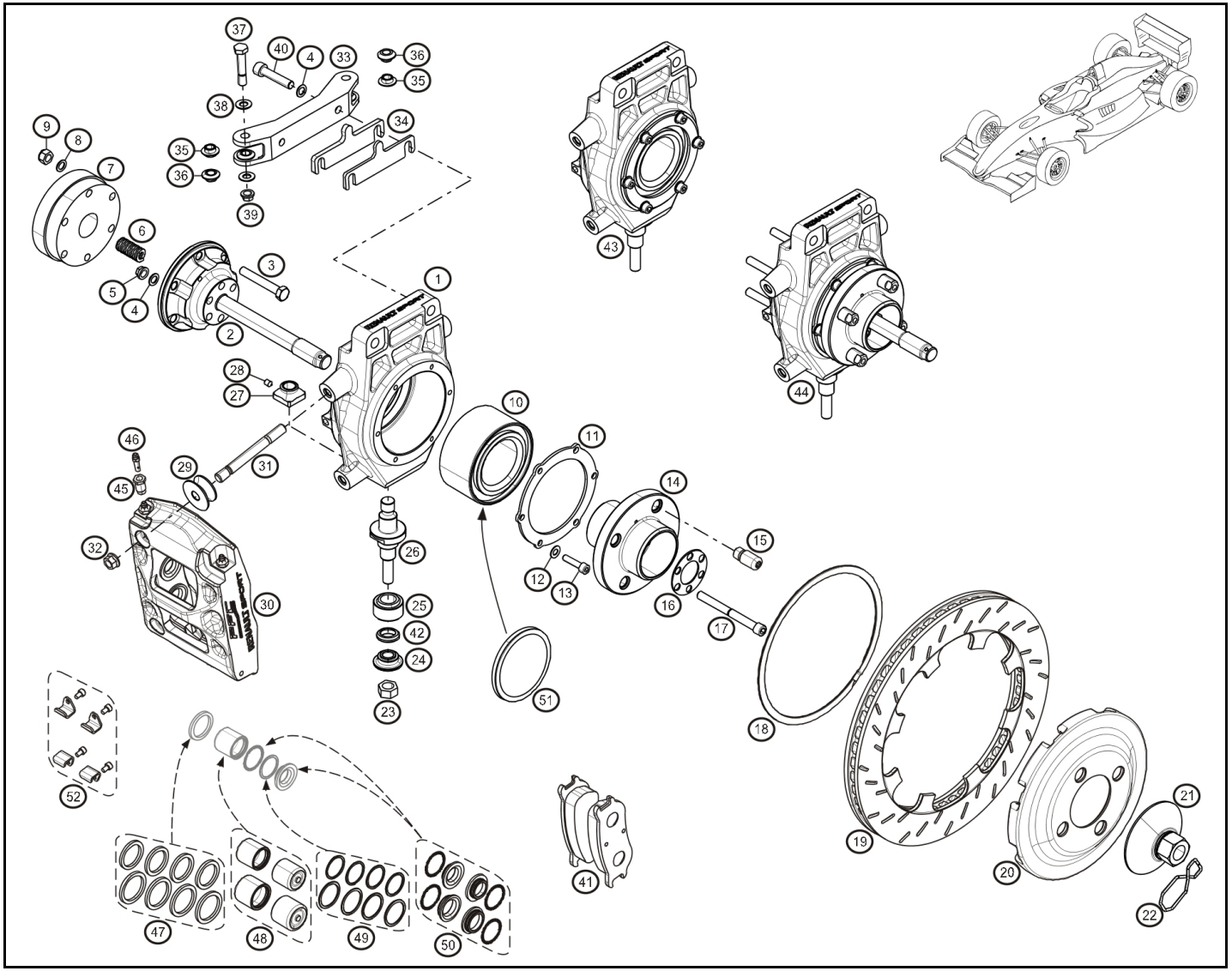

Rep.		Reference	Description	Coef
37		**77 11 166 188**	NAS bolt 1305-17	4
38		**77 11 166 367**	NAS T washer 5/16	8
39		**77 11 166 372**	Locknut 5/16	4
40		**77 11 154 904**	CHS Bolt M8-35 cl.12.9	4
41		**77 11 166 909**	Plaquettes PFC 11	1
		77 11 166 910	Plaquettes PFC 13	1
42		**77 11 166 218**	Upright lower	2
43	®	**77 11 166 681**	Rear upright with bearing	1
44	®	**00 11 166 683**	Porte moyeu ARG assemblé	1
	®	**77 11 166 683**	Porte moyeu ARD assemblé	1
45		**77 11 166 917**	Kit insert de vis de purge PFC	2
46		**77 11 166 916**	Kit vis de purge PFC	1
47		**77 11 166 912**	Kit joints piston PFC	1
48		**77 11 166 911**	Kit piston PFC	2
49		**77 11 166 914**	Kit joints isolation pistons PFC	1
50		**77 11 166 913**	Kit protections pistons PFC	2
51		**07 11 166 008**	Joint de roulement de roue	1
52		**77 11 166 915**	Kit butée de plaquettes PFC	2

juin-2014

RENAULT SPORT

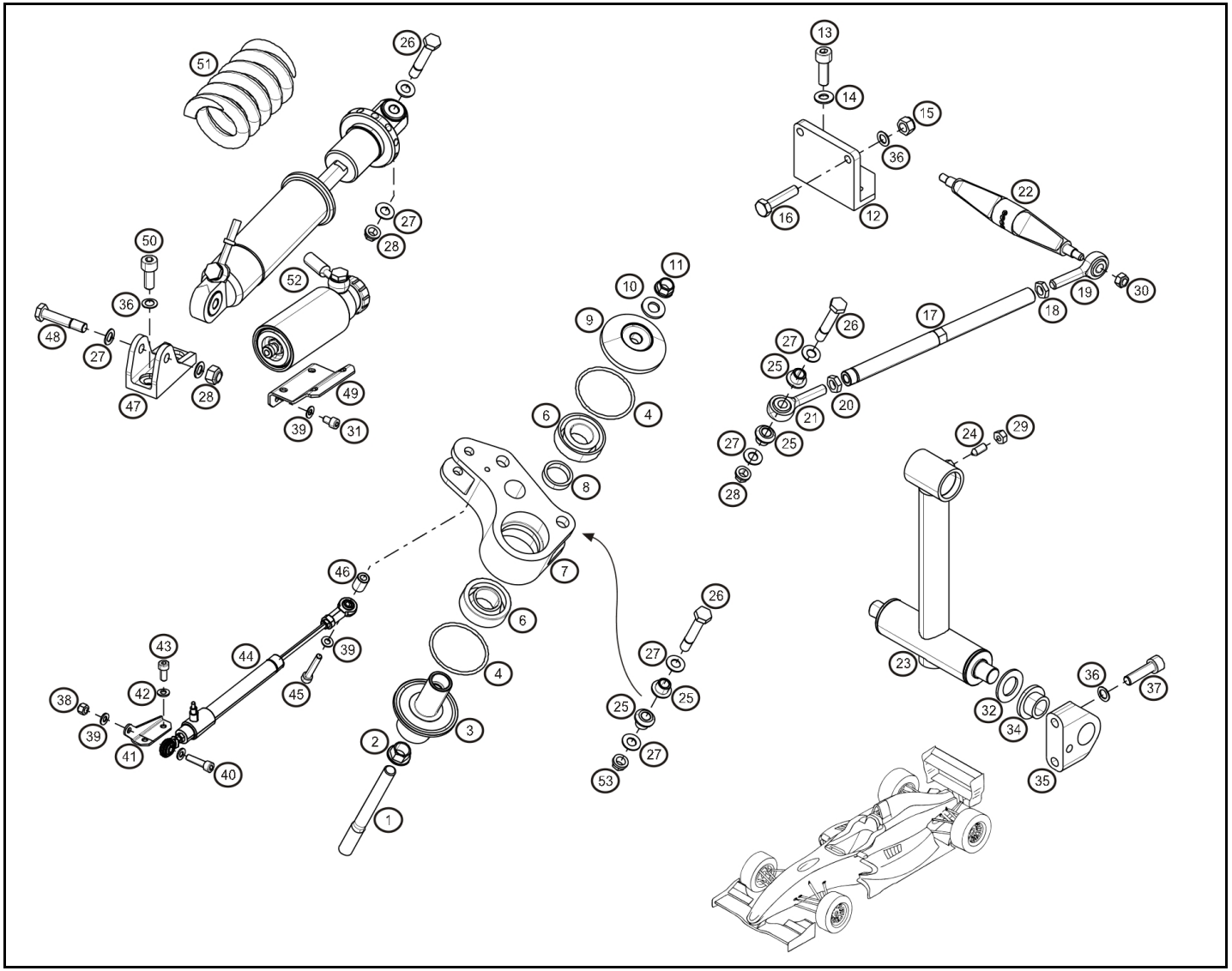

Rep.		Reference	Description	Coef
1		**77 11 166 522**	Rear rocker stud	2
2		**77 11 159 603**	Locknut 12PH135M	2
3	®	**77 11 166 523**	Rear rocker axle	2
4		**77 11 166 524**	Rear rocker o-ring	4
6		**77 11 166 526**	Rear rocker bearing	4
7	®	**77 11 166 527**	rear rocker	2
8		**77 11 166 544**	Bearing spacer 6.30mm	2
		77 11 166 545	Bearing spacer 6.35mm	2
		77 11 166 546	Bearing spacer 6.40mm	2
9	®	**77 11 166 529**	Rear rocker cover plate	2
10		**77 11 154 909**	Washer	2
11		**77 11 154 715**	Nut M10	2
12	®	**77 11 166 543**	Droop screws rear bracket	1
13		**77 11 153 535**	CHS Bolt M8-25	3
14		**77 11 154 791**	Washer	3
15		**77 11 166 392**	nut H M8	2
16		**77 11 166 394**	H Bolt M8-35	2
17	®	**77 11 166 531**	Drop link	2
18		**77 11 159 635**	Nut	2
19		**77 11 159 639**	Rod end bearing	2
20		**77 11 159 636**	Nut (LH thread)	2
21		**77 11 159 640**	Left threaded rod end	2
22	®	**77 11 166 532**	Couteau barre anti-roulis AR 5mm	1
	®	**77 11 166 528**	Couteau barre anti-roulis AR 7mm	1
23	®	**77 11 166 533**	RARB	1
24		**77 11 166 525**	Grub screw	1
25		**77 11 166 530**	Rear rocker spacer	8
26		**77 11 166 190**	NAS bolt 1305-22	6
27		**77 11 166 367**	NAS T washer 5/16	16
28		**77 11 166 372**	Locknut 5/16	8
29		**77 11 159 647**	nut H M6	1
30		**77 03 034 008**	Locknut M6	2
31		**77 11 154 763**	CHS Bolt M5-10	4
32		**77 11 166 534**	RARB washer	4
34		**77 11 166 536**	RARB bearing	2
35	®	**77 11 166 537**	LH Rear BAR support	1
	®	**77 11 166 538**	RH Rear BAR support	1
36		**77 11 126 887**	Washer SPS Ø8	10
37		**77 11 156 928**	CHS Bolt M8x125-30	4
38		**77 03 034 007**	Locknut M5	2
39		**77 11 154 878**	Washer Ø5	6
40		**77 11 158 342**	CHS Bolt M5-20 cl:12.9	2
41		**77 11 166 547**	LH Rear damper potentiometer	1

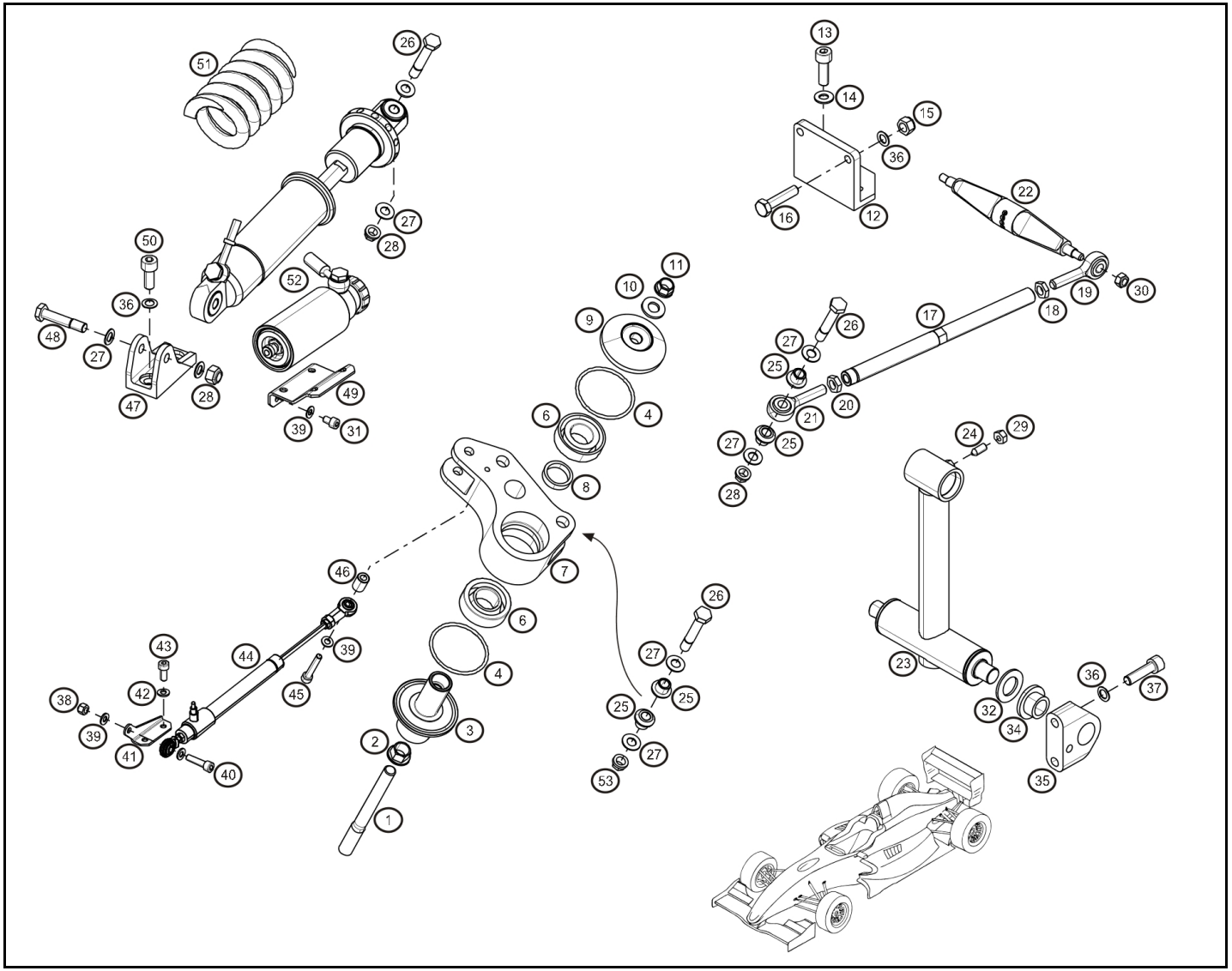

Rep.		Reference	Description	Coef
			support	
		77 11 166 548	RH Rear damper potentiometer support	1
42		**77 11 156 946**	Washer Ø6x14 ép:1,2	1
43		**77 11 050 540**	CHS Bolt M6-12 cl:12.9	2
44		**77 11 166 106**	Damper potentiometer	2
		77 11 166 759	Optional damper potentiometer	2
45		**77 11 154 769**	Screw	2
46		**77 11 166 542**	Spacer	2
47	®	**77 11 166 539**	Rear damper bracket	2
48		**77 11 166 189**	NAS bolt 1305-18	2
49		**77 11 166 540**	Rear damper canister bracket	2
50		**77 11 166 396**	CHS Bolt M8-20	4
51		**77 11 166 041**	Spring 800	2
		77 11 166 042	Spring 900	2
		77 11 166 141	Spring 1000	2
52		**77 11 166 032**	LH Rear damper	1
		77 11 166 033	RH Rear damper	1
53		**77 11 166 376**	UNF nut 5/16	2

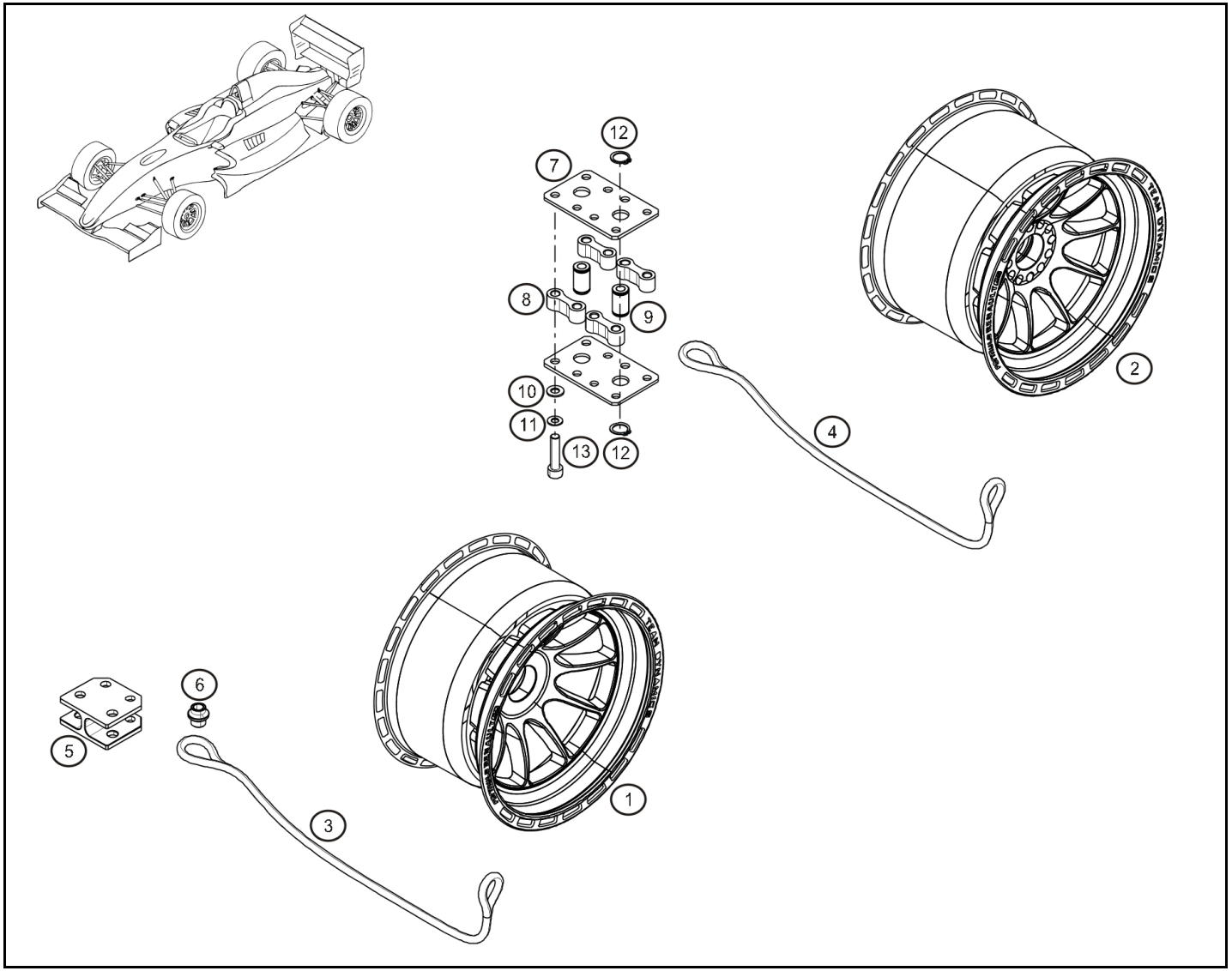

Rep.		Reference	Description	Coef
1		**77 11 166 020**	Wheel Front	2
2		**77 11 166 021**	Wheel Rear	2
3		**77 11 166 006**	Rear wheel tether	2
4		**77 11 166 007**	Front wheel tether	2
5	®	**77 11 166 244**	Front lower wishbone front bracket	1
6		**77 11 166 249**	Entretoise cable sécurité AV	2
7	®	**77 11 166 549**	Rear wheel tether retaining plate	2
8		**77 11 166 550**	Rear wheel tether mounting spacer	4
9		**77 11 166 551**	Wheeltether mounting axle	2
10		**77 11 154 791**	Washer	8
11		**77 11 126 887**	Washer SPS Ø8	8
12		**77 11 166 552**	Circlip Ø15	4
13		**77 11 154 904**	CHS Bolt M8-35 cl.12.9	8

janv.-2010

RENAULT SPORT

RENAULT

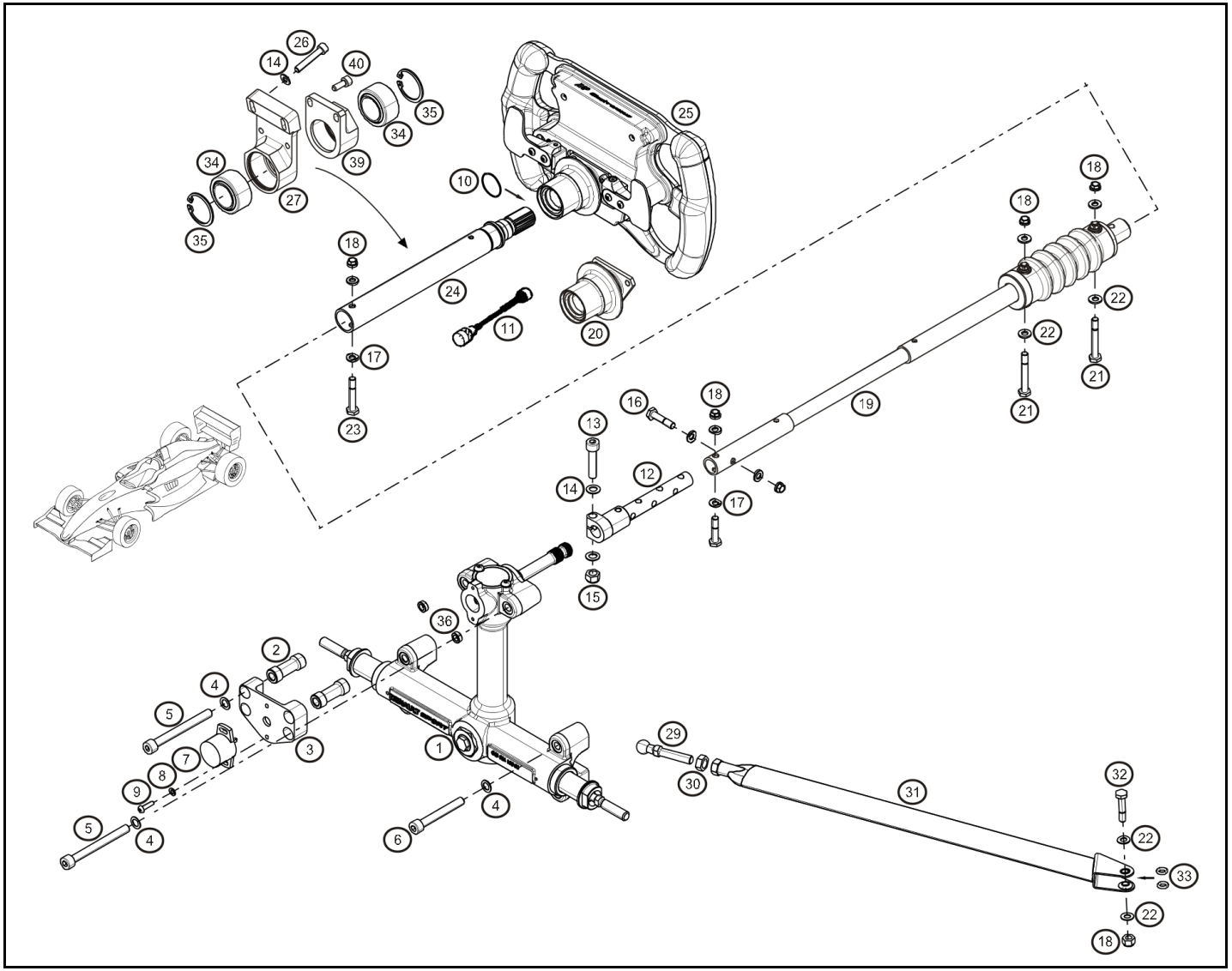

Rep.		Reference	Description	Coef
1		**77 11 166 001**	Rack	1
2		**77 11 166 498**	Sensor bracket spacer	2
3	®	**77 11 166 499**	Steering potentiometer support	1
4		**77 11 126 887**	Washer SPS Ø8	8
5		**77 11 158 350**	CHS Bolt M8-70 cl:12.9	4
6		**77 11 166 587**	CHS Bolt M8-50 cl:12.9	4
7		**77 11 166 104**	Steering sensor	1
10		**77 11 166 771**	O ring Ø18x2.5	1
11		**77 11 166 893**	Faisceau volant evo2013	1
12	®	**77 11 166 491**	Steering wheel adjuster	1
13		**77 11 165 096**	NAS bolt 1305-16	1
14		**77 11 126 686**	Washer SPS Ø6	2
15		**77 11 166 372**	Locknut 5/16	1
16		**77 11 159 853**	NAS bolt 1304-11	1
17		**77 11 166 748**	Steering column concave washer	6
18		**77 11 166 371**	Locknut 1/4	1
19	®	**77 11 166 747**	Complete lower steering column	1
20	®	**00 00 166 019**	Steering wheel hub	1
21		**77 11 165 212**	NAS bolt 6604-22	2
22		**77 11 166 366**	NAS T washer 1/4	1
23		**77 11 166 745**	NAS bolt 1304-17	1
24	®	**00 11 166 494**	Upper steering column	1
25	®	**77 11 166 892**	Steering wheel evo2013	1
26		**77 11 166 406**	CHS Bolt M6 -55 cl10.9	2
27	®	**77 11 166 495**	Steering column support	1
29		**77 11 166 555**	Steering rack ends	2
30		**77 11 166 385**	Nut-Thin 3/8	2
31	®	**77 11 166 488**	Steering tierod	2
32		**77 11 166 185**	NAS bolt 1304-12	2
33		**77 11 166 579**	O ring Ø12x3	4
34		**77 11 166 490**	Steering column bearing	2
35		**77 11 155 257**	Circlip Int Nomel 42x44.5x1.75	2
36		**77 11 166 497**	Steering sensor mounting spacer	1
39		**77 11 166 733**	Additional steering column support	1

mars-2014

RENAULT SPORT

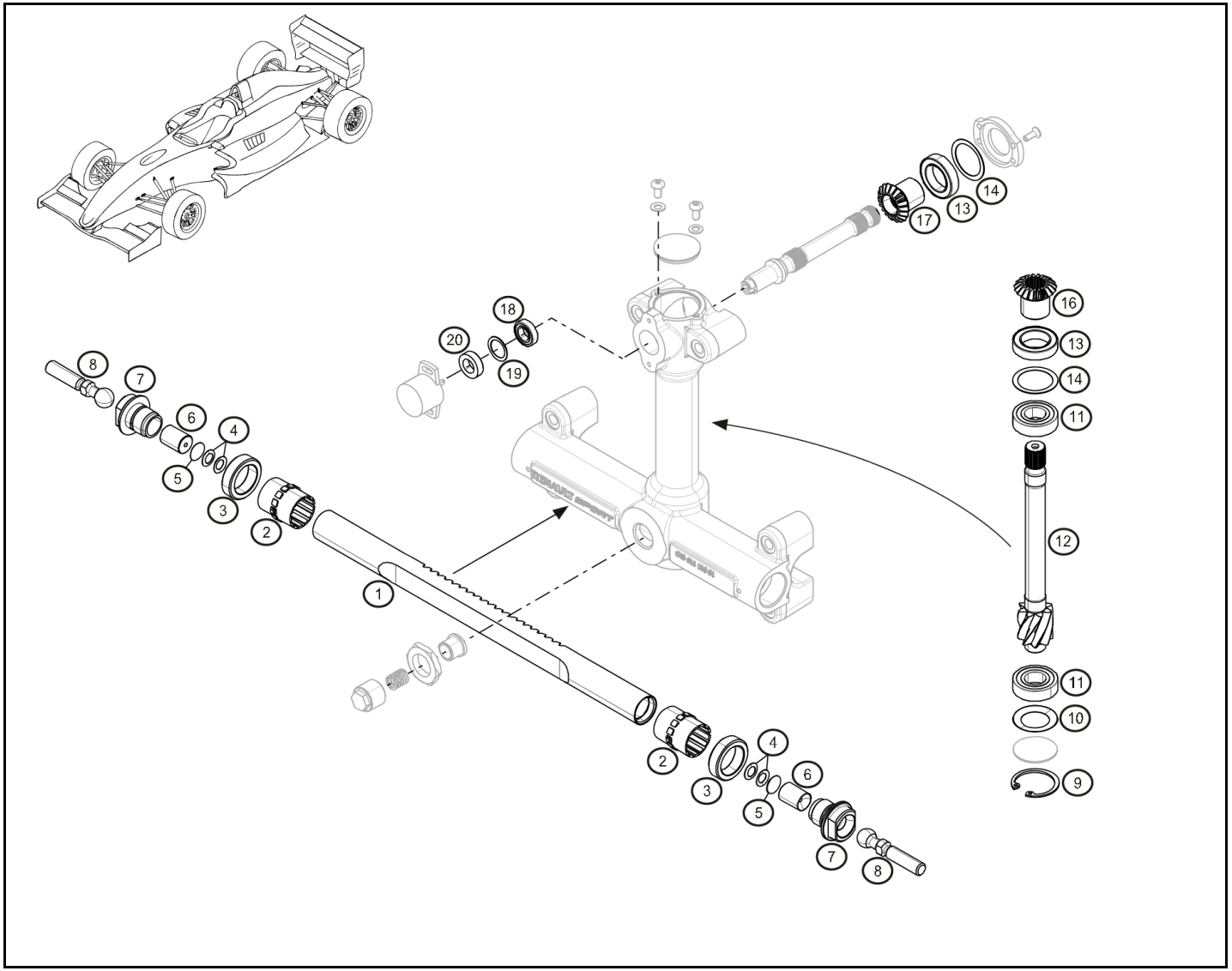

Rep.	Reference	Description	Coef
1	**77 11 166 700**	Steering rack bar	1
2	**77 11 159 770**	Plastic ring	2
3	**77 11 166 561**	Steering rack stop	2
4	**77 11 166 560**	Steering rack end Belleville	1
5	**77 11 166 558**	Spacer 0.20 d'embout de crémaillère	2
	77 11 166 894	Spacer 0.25 d'embout de crémaillère	2
	77 11 166 895	Spacer 0.30 d'embout de crémaillère	2
	77 11 166 896	Spacer 0.35 d'embout de crémaillère	2
	77 11 166 897	Spacer 0.38 d'embout de crémaillère	2
	77 11 166 559	Spacer 0.40 d'embout de crémaillère	2
6	**77 11 166 557**	Nylon spacer	2
7	**77 11 166 556**	Nut	2
8	**77 11 166 555**	Steering rack ends	2
9	**77 11 166 578**	Circlips	1
10	**77 11 166 577**	Belleville washer	1
11	**77 11 166 576**	Pinion bearing	2
12	**77 11 166 701**	Steering rack pinion	1
13	**77 11 166 571**	Countergear bearing	2
14	**77 11 166 898**	Spacer Ø32 ép:0.15mm	2
	77 11 166 572	Spacer Ø32 ép:0.20mm	2
	77 11 166 573	Spacer Ø32 ép:0.25mm	2
	77 11 166 574	Spacer Ø32 ép:0.30mm	2
	77 11 166 899	Spacer Ø32 ép:0.35mm	2
	77 11 166 575	Spacer Ø32 ép:0.38mm	2
16	**77 11 166 570**	Pignon de renvoi	1
17	**77 11 166 569**	Pignon de renvoi	1
18	**77 11 166 568**	Bearing	1
19	**77 11 166 564**	Spacer Ø19 ép:0.15mm	1
	77 11 166 565	Spacer Ø19 ép:0.20mm	1
	77 11 166 566	Spacer Ø19 ép:0.25mm	1
	77 11 166 567	Spacer Ø19 ép:0.30mm	1
	77 11 166 663	Spacer Ø19 ép:0.35mm	1
	77 11 166 664	Spacer Ø19 ép:0.38mm	1
20	**77 11 166 563**	Bague de pignon de crémaillère	1

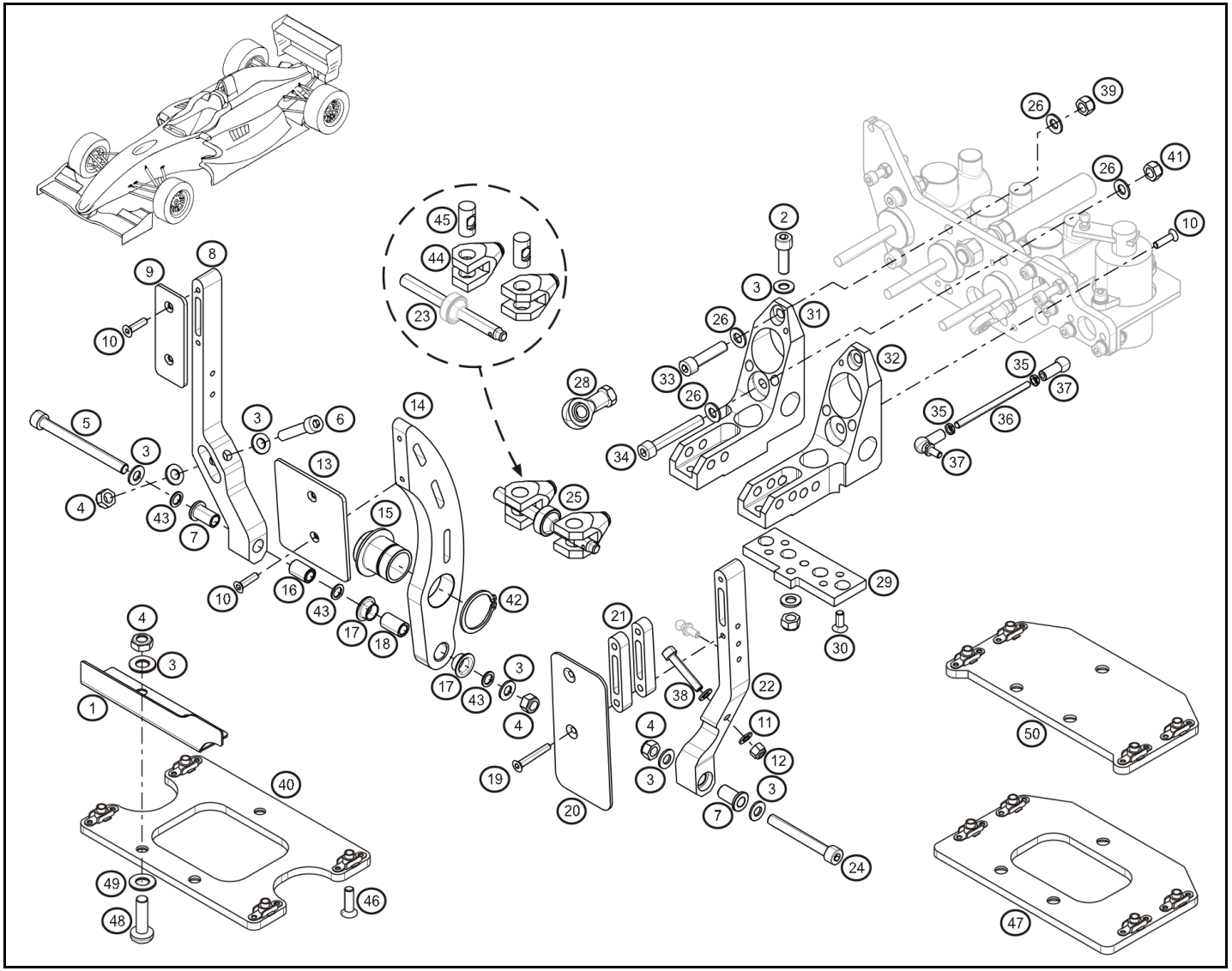

Rep.		Reference	Description	Coef
1	®	**77 11 166 480**	Foot rest	1
2		**77 11 156 928**	CHS Bolt M8x125-30	1
4		**77 03 034 237**	Locknut M8	1
5		**77 11 127 832**	CHS Bolt M8-90 cl:12.9	1
6		**77 11 156 960**	CHS Bolt M8x125-40 CL 12.9	1
7		**77 11 166 462**	Pedal bush	2
8	®	**77 11 166 460**	Clutch pedal	1
9		**77 11 166 461**	Clutch pedal pad	1
10		**77 11 165 353**	FHS Bolt M5-20	4
11		**77 11 160 368**	Plain washer Ø6xØ121.2	2
12		**77 03 034 008**	Locknut M6	1
13	®	**77 11 166 457**	Brake pedal pad	1
14	®	**77 11 166 456**	Brake pedal	1
15		**77 11 166 464**	Brake balance bar bush	1
16		**77 11 166 463**	Pedal spacer	1
17		**77 11 166 459**	Brake pedal	2
18		**77 11 166 458**	Brake pedal spacer	1
19		**77 11 166 381**	FHS Bolt M5-40	2
20	®	**77 11 166 455**	Throttle pedal pad	1
21		**77 11 166 447**	Throttle pedal pad spacer 5mm	1
		77 11 166 454	Throttle pedal pad spacer 10mm	1
22	®	**77 11 166 453**	Accelerator pedal	1
23		**77 11 166 465**	Brake balance bar	1
24		**77 11 166 382**	CHS Bolt M8-65 cl:12	1
25	®	**77 11 166 045**	Brake balance bar	1
26		**77 11 166 367**	NAS T washer 5/16	4
27		**77 11 126 887**	Washer SPS Ø8	1
28		**77 11 166 485**	Clutch pedal rod end	1
29		**77 11 166 449**	Pedalbox lower plate	1
30		**77 11 166 177**	FHS Bolt M6-15	4
31	®	**77 11 166 450**	LH pedalbox support	2
32	®	**77 11 166 451**	RH pedalbox support	1
33		**77 11 166 378**	CHS Bolt 5/16 1"1/4	2
34		**77 11 166 379**	CHS Bolt 5/16 2"1/4	2
35		**77 11 154 905**	nut H M5	2
36		**77 11 166 470**	Throttle potentiometer axle	1
37		**77 11 166 468**	Throttle pedal rod end	2
38		**77 11 050 600**	CHS Bolt M6-35 cl:12.9	1
39		**77 11 166 376**	UNF nut 5/16	2
40	®	**77 11 166 792**	Support pédalier	1
41		**77 11 166 372**	Locknut 5/16	2
42		**77 11 166 444**	Circlip Ø28	1
43		**77 11 166 442**	Pedal spacer Ø12 ép:0.5mm	1

avr.-2015

RENAULT SPORT

RENAULT

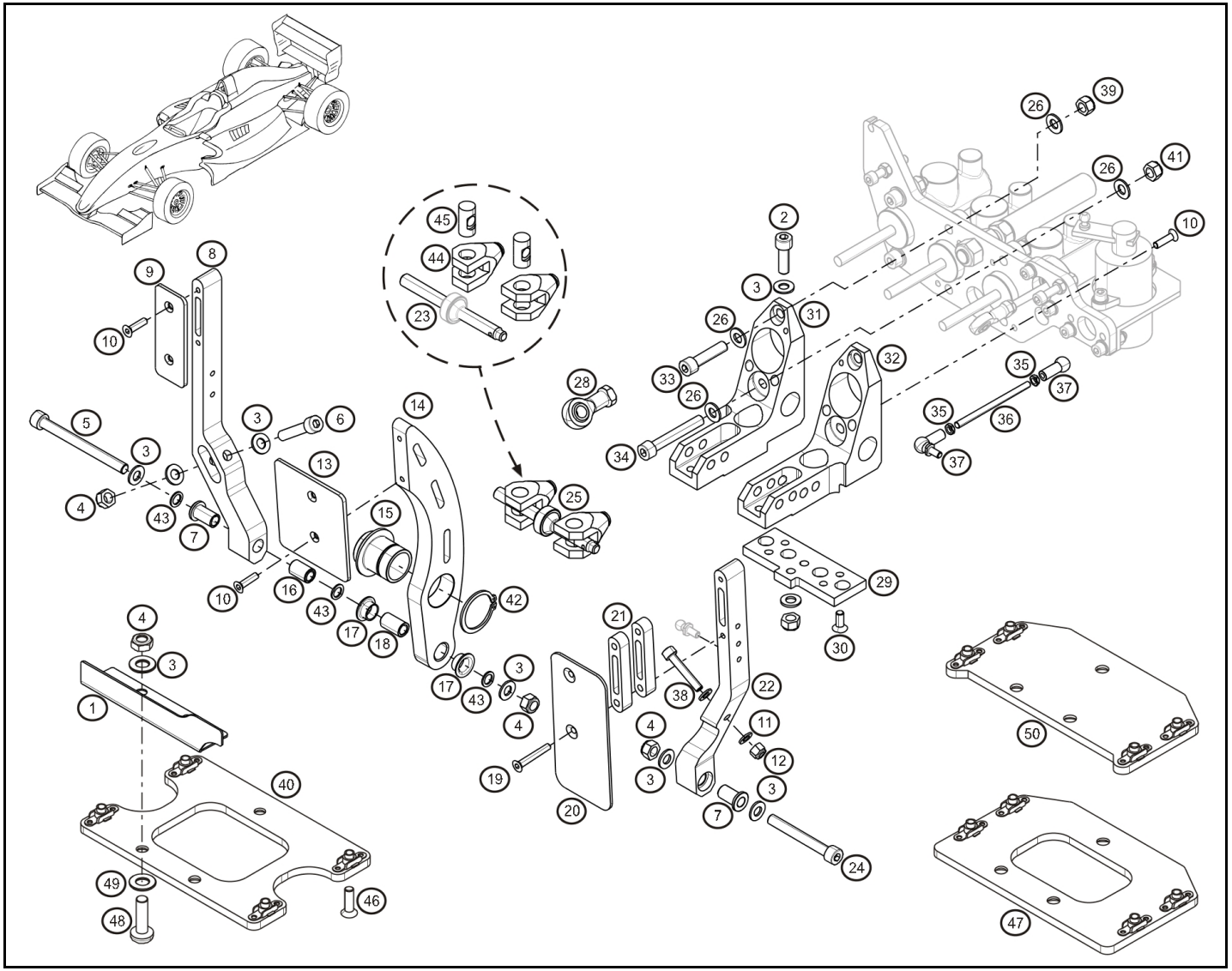

Rep.		Reference	Description	Coef
		77 11 166 443	Pedal spacer Ø12 ép:1mm	1
44	®	**77 11 166 466**	Brake balance bracket	2
45		**77 11 166 467**	Brake balance bracket axle	1
47	®	**77 11 166 808**	Support pédalier gand pilote	1
48		**77 11 156 940**	Vis CBHC M6-25	4
49		**77 11 166 868**	Washer-Onduflex M6x12x0.5	4
50		**77 11 166 809**	Platine de pédalier "grand pilote V2"	1

avr.-2015

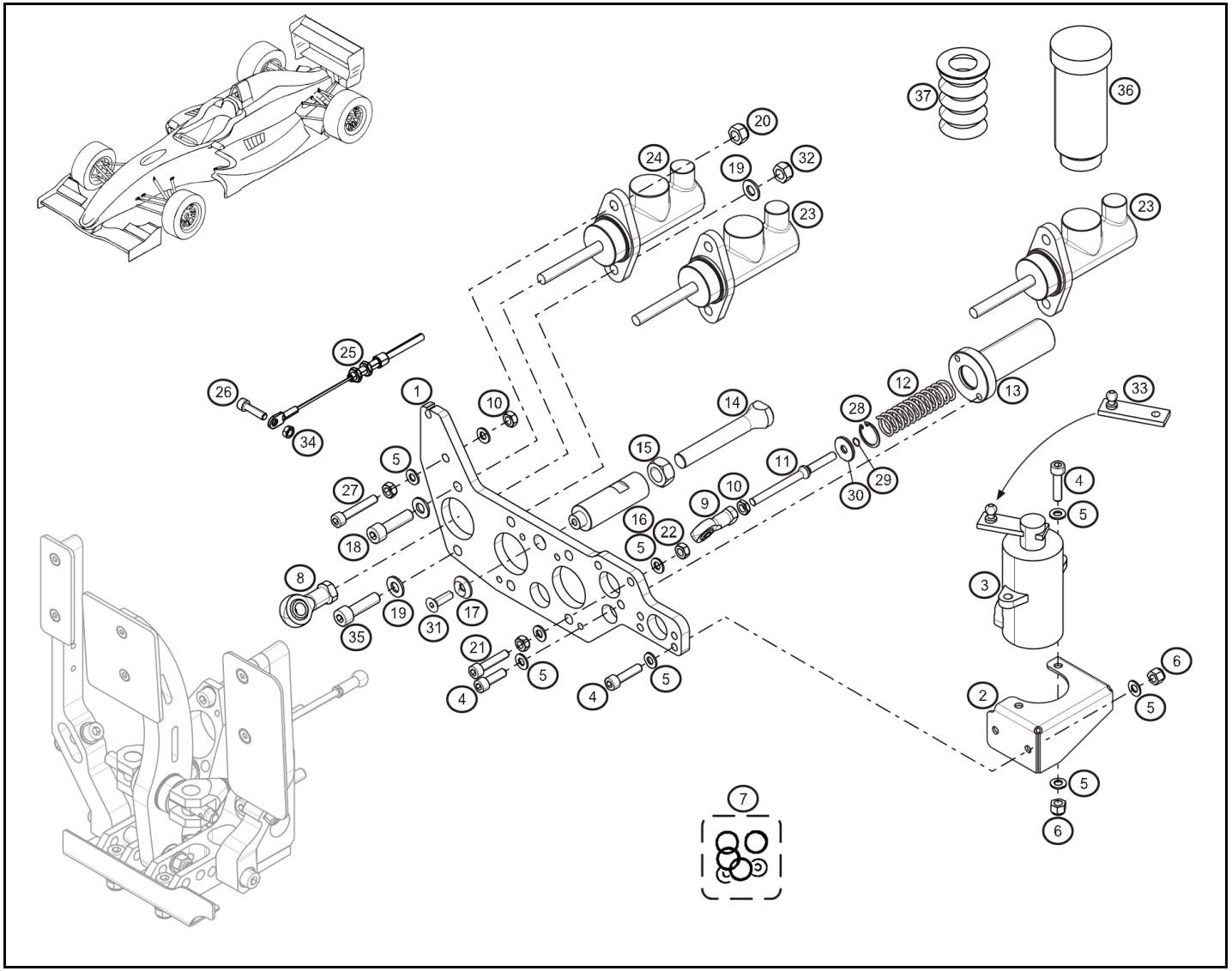

Rep.		Reference	Description	Coef
1	®	**77 11 166 452**	Pedalbox main plate	1
2	®	**77 11 166 471**	Throttle potentiometer bracket	1
3		**77 11 166 704**	Throttle pedal potentiometer	1
4		**77 11 128 925**	CHS Bolt M6-20	6
5		**77 11 160 368**	Plain washer Ø6xØ121.2	10
6		**77 03 034 008**	Locknut M6	4
7		**77 11 165 201**	Repair kit-M/Cyl Ø0.625	1
		77 11 165 202	Repair kit-M/Cyl Ø0.700	1
		77 11 165 203	Repair kit-M/Cyl Ø0.750	1
8		**77 11 166 485**	Clutch pedal rod end	1
9		**77 11 166 475**	Throttle pedal rod end	1
10		**77 11 159 647**	nut H M6	3
11		**77 11 166 474**	Throttle pedal spring axle	1
12		**77 11 166 473**	Throttle spring	1
13	®	**77 11 166 472**	Throttle spring casing	1
14		**77 11 166 476**	Pedalbox stop	1
15		**77 11 166 391**	H nut-Thin M12	1
16		**77 11 166 477**	Pedalbox short adjuster	1
		77 11 166 446	Pedalbox long adjuster	1
17		**77 11 158 036**	Conical washer Ø6 x19 x4	1
18		**77 11 158 586**	CHS Bolt 5/16x1"	1
19		**77 11 166 367**	NAS T washer 5/16	1
20		**77 11 166 376**	UNF nut 5/16	1
21		**77 11 050 600**	CHS Bolt M6-35 cl:12.9	1
23	®	**77 11 166 481**	Master Cylinder Ø14 (noir/orange)	1
	®	**77 11 166 900**	Master Cylinder Ø15 (noir/rouge)	1
	®	**77 11 166 482**	Master Cylinder Ø15.9 (noir) 0.625	1
25		**77 11 166 580**	Emergency neutral cable	1
26		**77 11 159 347**	BHS Bolt M5-16	1
27		**77 11 158 572**	CHS Bolt M6-70 cl:12.9	1
28		**77 11 166 439**	Internal snap ring Ø20	1
29		**77 11 166 441**	Circlips-ext. Ø6 axe ressort	1
30		**77 11 166 697**	Throttle spring washer	1
31		**77 11 159 333**	FHS Bolt M6-20	1
32		**77 11 166 372**	Locknut 5/16	1
33		**00 01 166 022**	Biellette capteur accélérateur	1
34		**77 03 034 007**	Locknut M5	1
35		**77 11 166 378**	CHS Bolt 5/16 1"1/4	1
36		**77 11 166 487**	Brake pump reservoir	3
37		**77 11 166 671**	Brake reservoir bellow	3

juin-2014

RENAULT SPORT

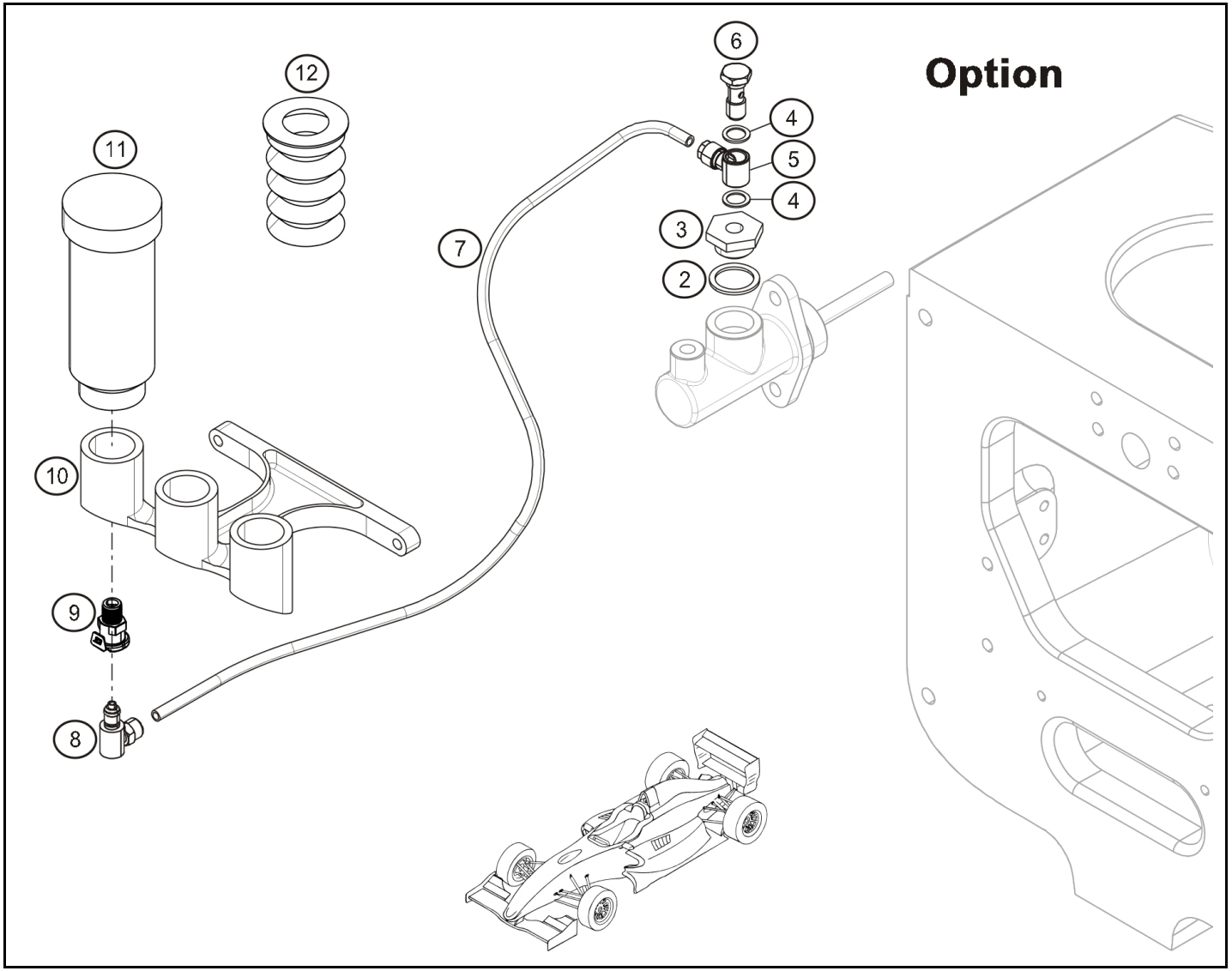

Rep.	Reference	Description	Coef
2	**00 11 166 861**	Copper washer	3
3	**77 11 166 861**	Adaptateur MC frein	3
4	**77 11 156 532**	Copper washer 10x14x1	2
5	**77 11 166 862**	Banjo MC frein	3
6	**77 11 166 863**	Vis banjo MC frein	3
7	**00 01 166 772**	Tuyau bocal frein	3
8	**77 11 166 773**	Coupleur bocal frein "male"	3
9	**77 11 166 772**	Coupleur bocal frein "femelle"	3
10	**77 11 166 860**	Support bocaux MC frein	1
11	**77 11 166 487**	Brake pump reservoir	3
12	**77 11 166 671**	Brake reservoir bellow	3

janv.-2014

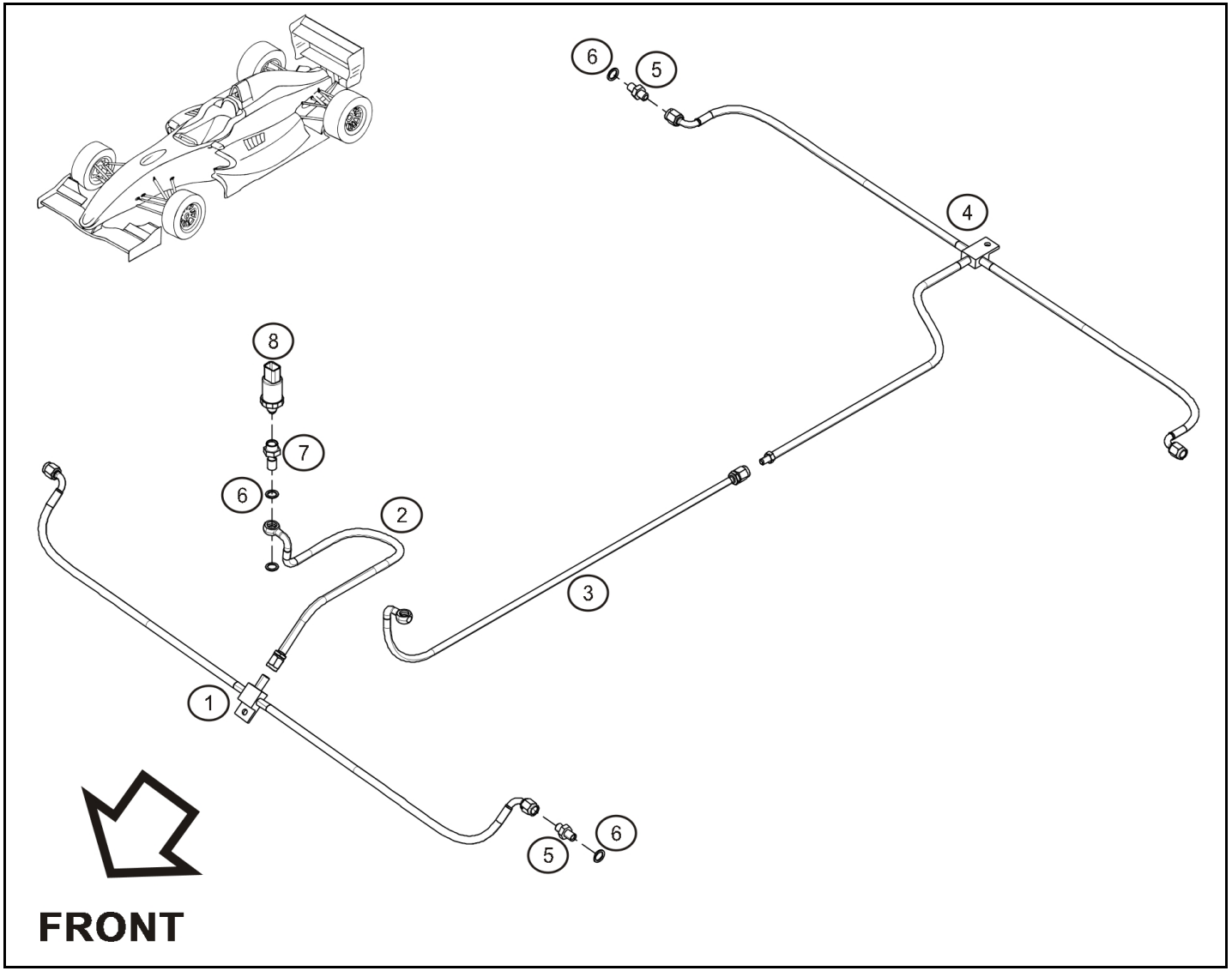

Rep.	Reference	Description	Coef
1	**77 11 166 134**	Front brake line to calipers	1
2	**77 11 166 135**	Front brake line to brake pump	1
3	**77 11 166 136**	Rear brake line to brake pump	1
4	**77 11 166 137**	Rear brake line to calipers	1
5	**77 11 166 918**	Adaptateur etrier PFC	4
6	**77 11 156 532**	Copper washer 10x14x1	2
7	**77 11 166 139**	Banjo screw	2
8	**77 11 166 109**	Brake pressure sensor	1

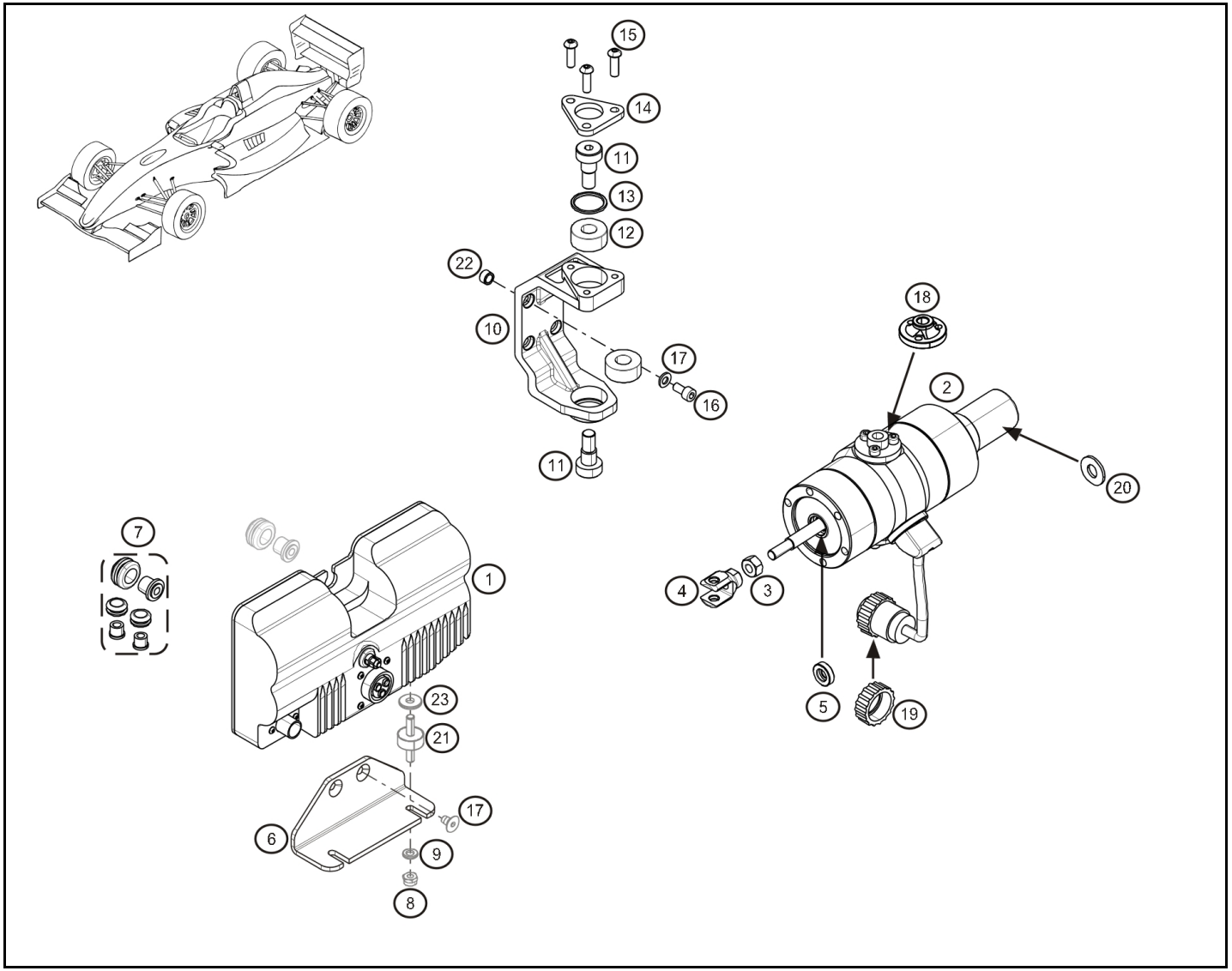

Rep.		Reference	Description	Coef
1	®	**77 11 166 103**	GCU Powerbox	1
2		**77 11 166 102**	Gearbox actuator	1
3		**01 00 403 031**	nut HM M10x100 Zn	1
4		**01 01 910 426**	Actuator axle link	1
5		**77 11 166 427**	Axle lip seal	1
6		**77 11 166 848**	Support power box	1
7		**77 11 166 708**	Actuator mounting kit	1
10		**77 11 166 422**	Gearbox actuator support	1
11		**77 11 166 424**	Actuator mounting screw	2
12		**77 11 166 423**	Bearing	2
13		**77 11 166 425**	O ring	1
14		**77 11 166 426**	Actuator bearing retaining plate	1
16		**77 11 127 480**	CHS Bolt M6-18 cl:12.9	4
17		**77 11 126 686**	Washer SPS Ø6	4
18		**77 11 166 586**	Actuator	1
19		**00 11 166 103**	Connector ring	1
20		**77 11 166 746**	Gearbox actuator axle washer	1
22		**01 00 085 982**	Dowel pin	2
100		**77 11 166 728**	GB actuator spring	1

mars-2014

RENAULT SPORT

RENAULT

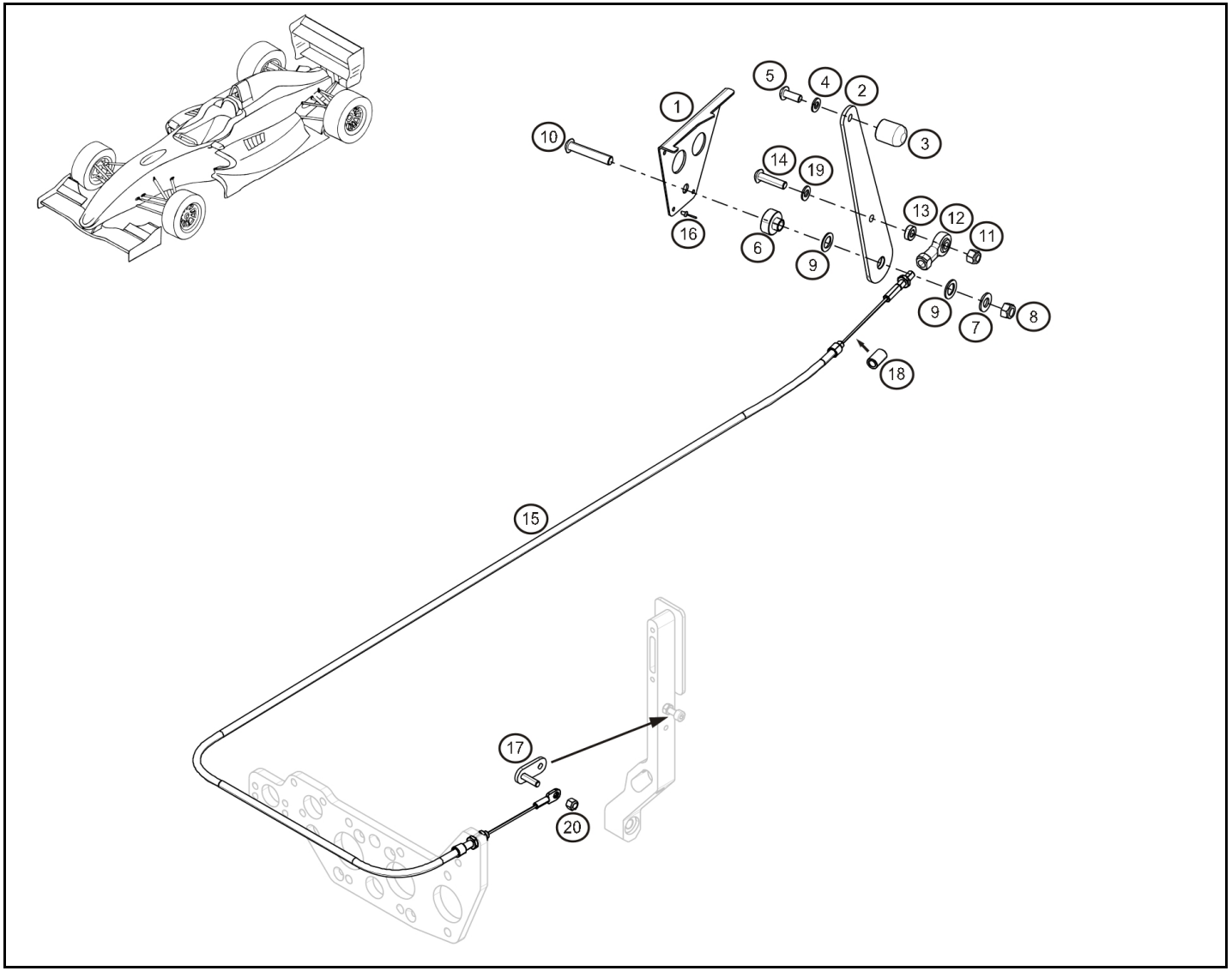

Rep.		Reference	Description	Coef
1		**77 11 166 581**	Emergency clutch lever	1
2	®	**77 11 166 582**	Emergency clutch lever	1
3		**77 11 166 583**	Emergency clutch lever knob	1
4		**77 11 126 686**	Washer SPS Ø6	4
5		**77 11 154 325**	Vis CBHC M6-16	1
6		**77 11 166 584**	Emergency lever spacer	1
7		**77 11 154 791**	Washer	1
8		**77 11 156 977**	Nut HM8 Nylon	1
9		**77 11 128 658**	Washer SPS Ø10	2
10		**77 11 154 886**	BHS Bolt M8-45	1
11		**77 03 034 008**	Locknut M6	1
12		**77 11 166 475**	Throttle pedal rod end	1
13		**77 11 166 585**	Spacer	1
14		**77 11 158 346**	CHS Bolt M6-25 cl:12.9	1
15		**77 11 166 580**	Emergency neutral cable	1
16		**77 11 166 142**	Rivet Ø3x8	4
17		**77 11 166 729**	Rod for emergency clutch cable	1
18		**77 11 166 730**	Spacer 10mm câble d'embrayage	1
		77 11 166 731	Spacer 15mm câble d'embrayage	1
		77 11 166 732	Spacer 20mm câble d'embrayage	1
19		**77 11 160 368**	Plain washer Ø6xØ121.2	1

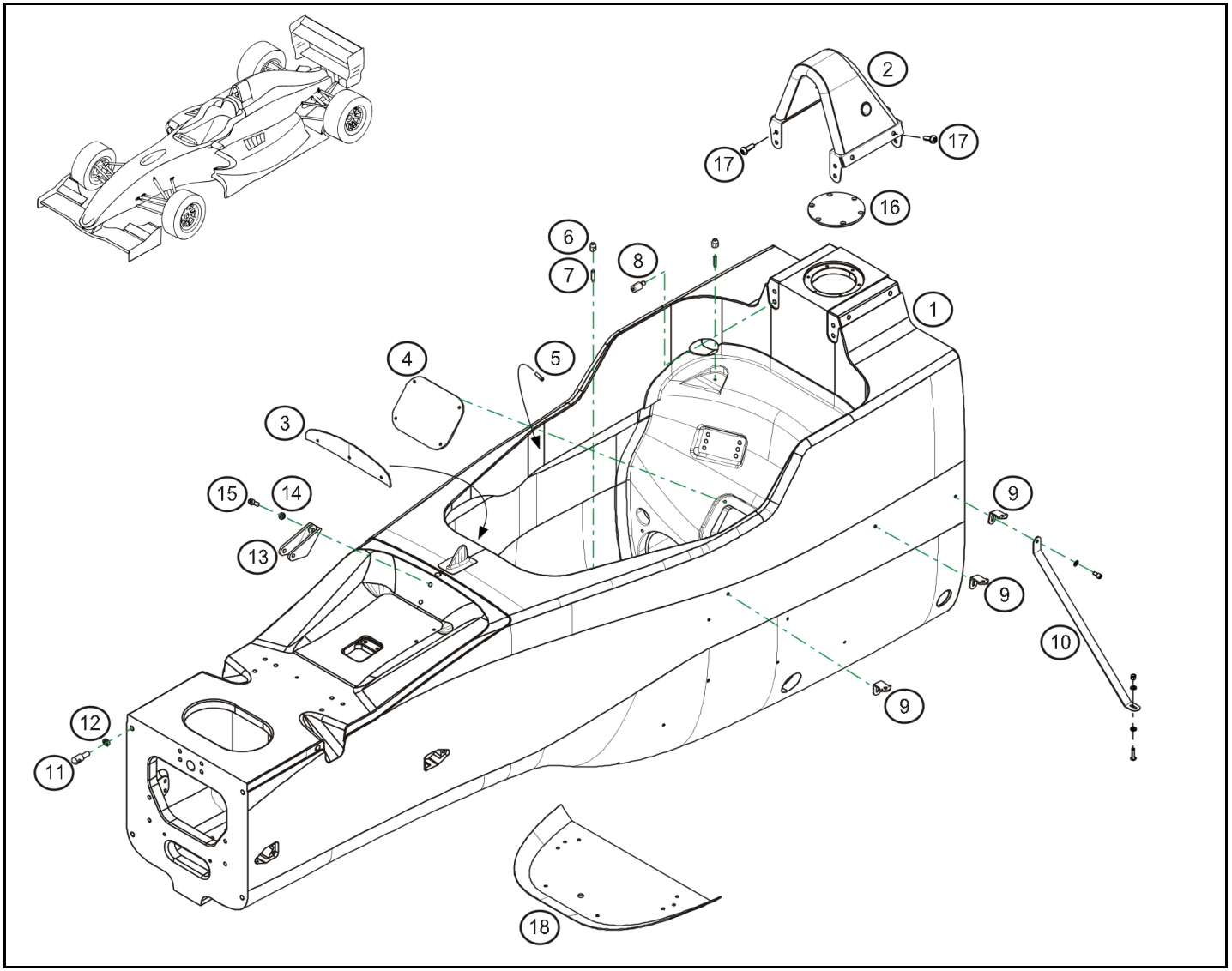

Rep.		Reference	Description	Coef
1		**77 11 166 810**	Coque	1
2	®	**77 11 166 811**	Rollcage	1
3	®	**77 11 166 670**	Windscreen	1
4		**77 11 166 837**	Plaque translucide fermeture reservoir	1
5		**77 11 166 795**	Pion fix AV tour de cou	2
6		**77 11 166 798**	Pion siège extractible	4
7		**77 11 166 859**	Tige fileté M6-30 cl:4.8	4
8		**77 11 166 804**	Pion AR tour de cou	2
9	®	**77 11 166 776**	Support ponton	6
10	®	**77 11 166 779**	Tirant chassis / plancher	2
11		**77 11 166 778**	Support nez	4
12		**00 11 166 778**	Ecrou fix. nez	4
13	®	**77 11 166 521**	Front damper bracket	1
14		**77 11 154 791**	Washer	2
15		**77 11 156 928**	CHS Bolt M8x125-30	2
16		**77 11 166 794**	Plaque fermeture chassis sup	1
17		**77 11 163 133**	BHS Bolt M8-20 cl:10.9	12
18	®	**77 11 166 720**	Renfort de coque	1

janv.-2014

RENAULT SPORT

RENAULT

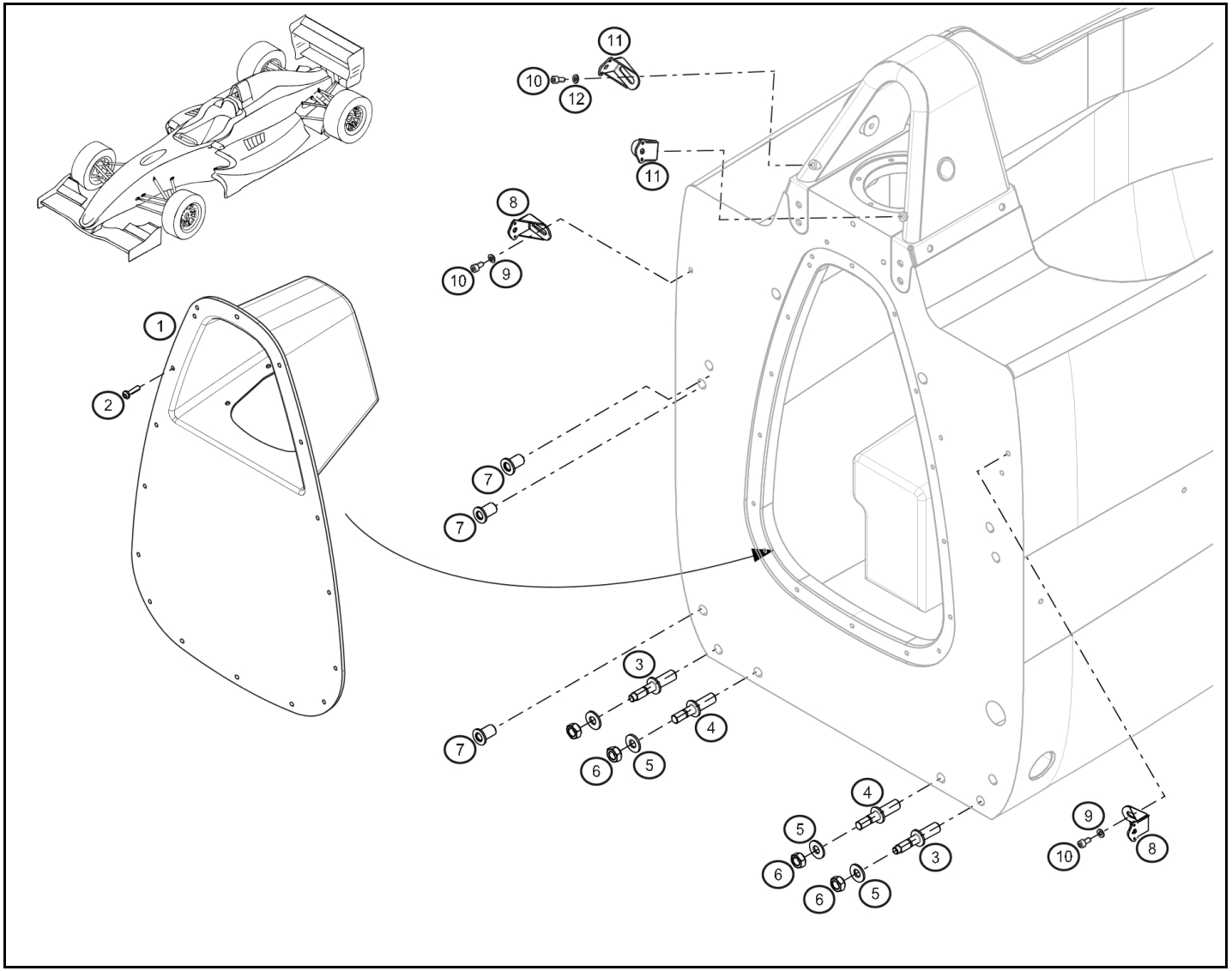

Rep.		Reference	Description	Coef
1	®	**77 11 166 814**	Plaque fermeture reservoir	1
2		**77 11 166 864**	Vis BHC emb. M5-12	19
3		**77 11 166 153**	Oil sump long mounting stud	2
4		**77 11 166 152**	Oil sump short mounting stud	2
5		**77 11 154 909**	Washer	4
6		**77 03 034 106**	Nut Nylstop M10	4
7		**77 11 166 151**	Engine mounting chassi bush	6
8	®	**77 11 166 828**	Support capot moteur inf	2
9		**77 11 166 430**	Washer Ø6x20	2
10		**77 11 126 315**	CHS Bolt M6x15	4
11	®	**77 11 166 827**	Support capot moteur sup.	2
12		**77 11 160 368**	Plain washer Ø6xØ121.2	2

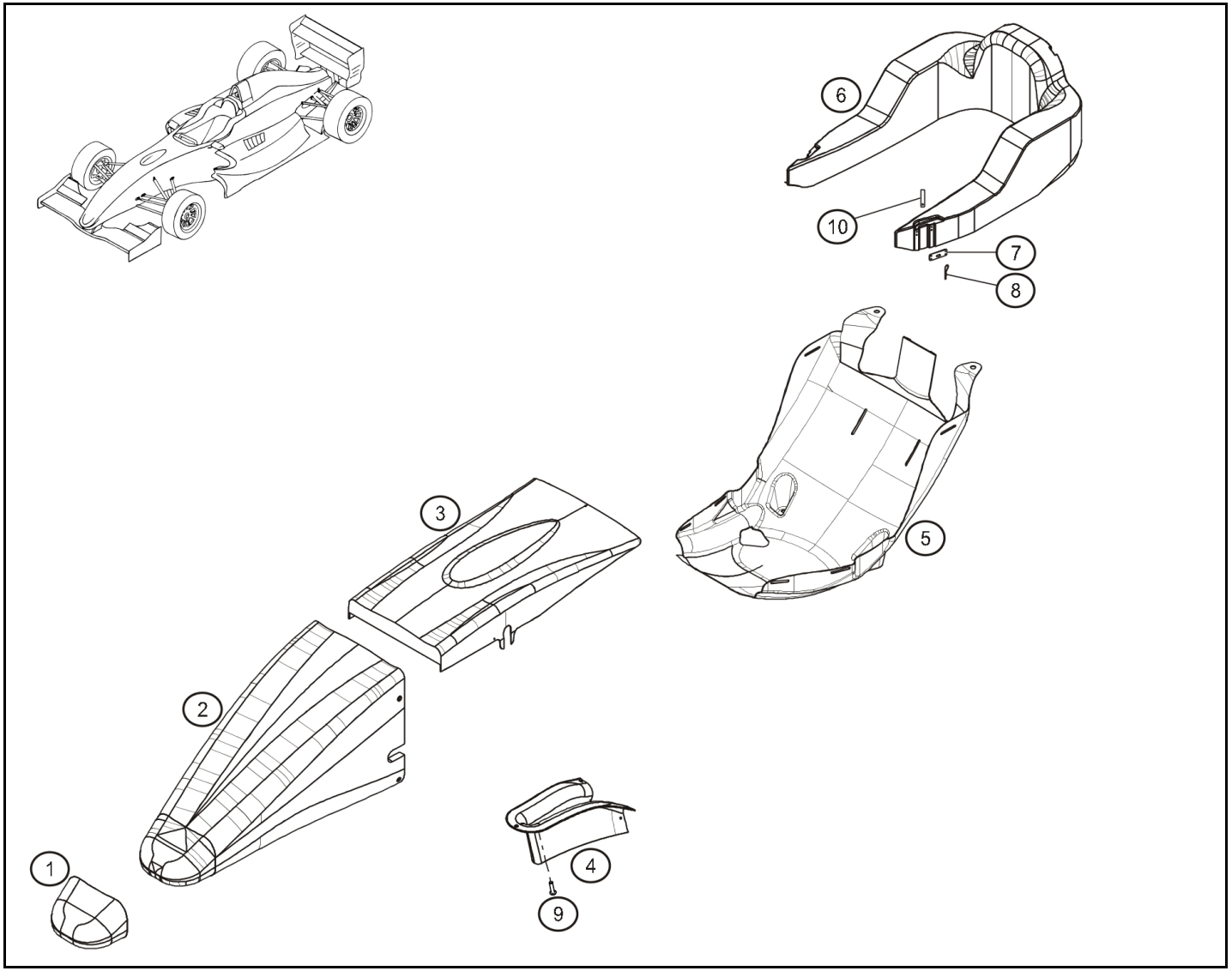

Rep.		Reference	Description	Coef
1	®	**77 11 166 829**	Nose tip	1
2	®	**77 11 166 830**	Nosebox	1
3	®	**77 11 166 815**	Bonnet	1
4	®	**77 11 166 816**	Etrave	1
5	®	**77 11 166 813**	Siège extractible	1
6	®	**77 11 166 812**	headrest	1
7		**00 11 166 795**	Plaque fix. tour de cou	2
8		**07 11 166 812**	Goupille tour de cou	2
9		**77 03 008 220**	Screw RLX M5-12 cl:8.8	5
10		**77 11 166 923**	Languette alu	2

avr.-2015

RENAULT SPORT

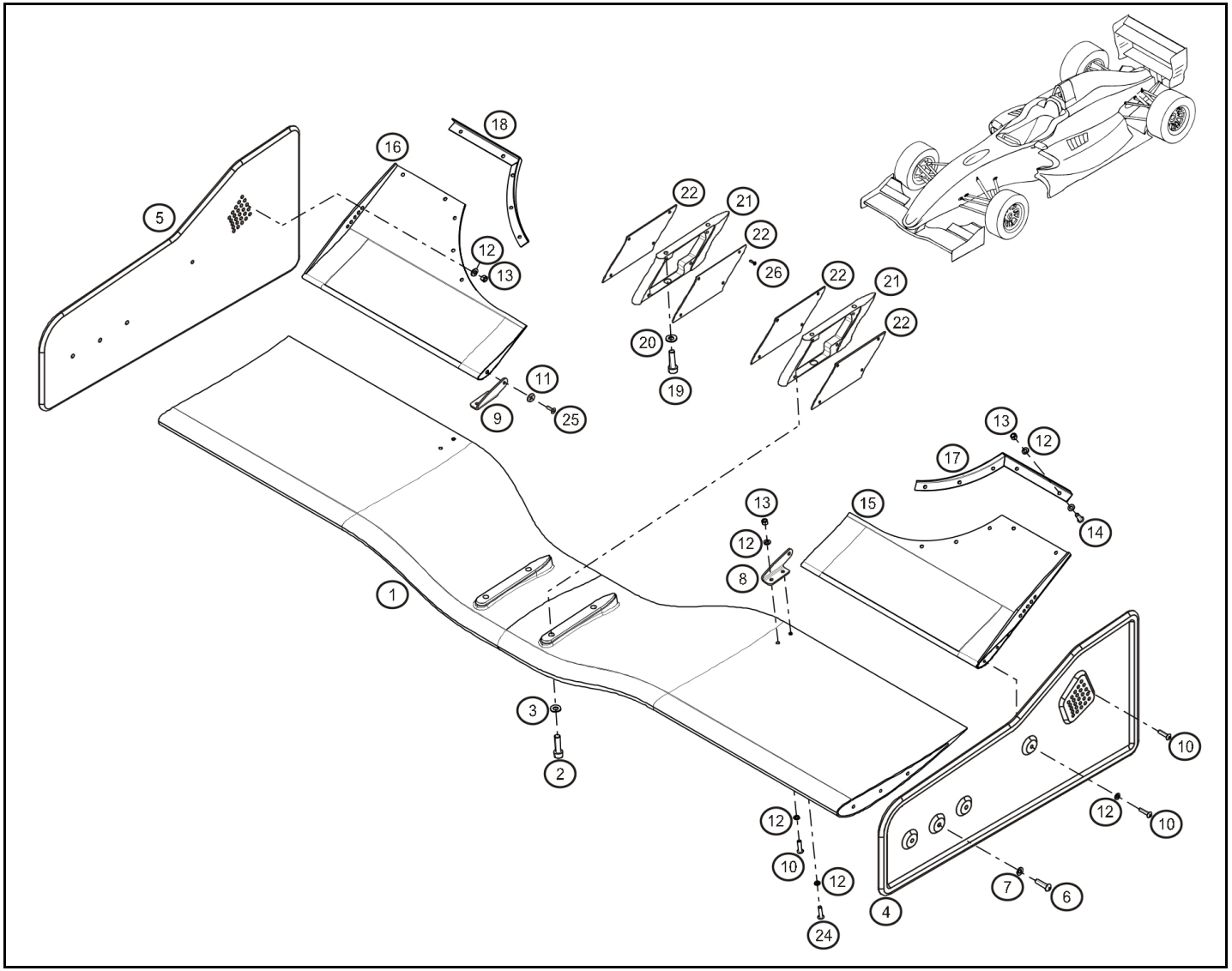

Rep.		Reference	Description	Coef
1	®	**77 11 166 633**	Front Wing	1
2		**77 11 156 928**	CHS Bolt M8x125-30	4
3		**77 11 126 887**	Washer SPS Ø8	4
4	®	**77 11 166 831**	Dérive AVG	1
5	®	**77 11 166 832**	Dérive AVD	1
6		**77 11 156 940**	Vis CBHC M6-25	6
7		**77 11 160 368**	Plain washer Ø6xØ121.2	6
8	®	**77 11 166 833**	Support G de Flap AV "inox"	1
9	®	**77 11 166 834**	Support D de Flap AV "inox"	1
10		**77 11 154 862**	BHS Bolt M5-20	6
11		**77 11 166 688**	Conical washer Ø 5.2	2
12		**77 11 154 878**	Washer Ø5	20
13		**77 03 034 007**	Locknut M5	16
14		**77 11 156 958**	Vis CBHC M5-10	10
15	®	**77 11 166 638**	LH Front flap	1
16	®	**77 11 166 639**	RH Front flap	1
17	®	**77 11 166 640**	FL flap gurney	1
18	®	**77 11 166 641**	FR flap gurney	1
19		**77 11 128 925**	CHS Bolt M6-20	4
20		**77 11 126 686**	Washer SPS Ø6	2
21	®	**77 11 167 720**	Support aile AV	2
22		**77 11 167 721**	Plaque plastique fermeture support aile AV	4
24		**77 11 154 768**	Button head socket screw M5-16	4
25		**77 11 166 408**	FHS Bolt M5-15	2
26		**77 11 159 396**	BHS Bolt M4-8 cl:10.9	16

oct.-2013

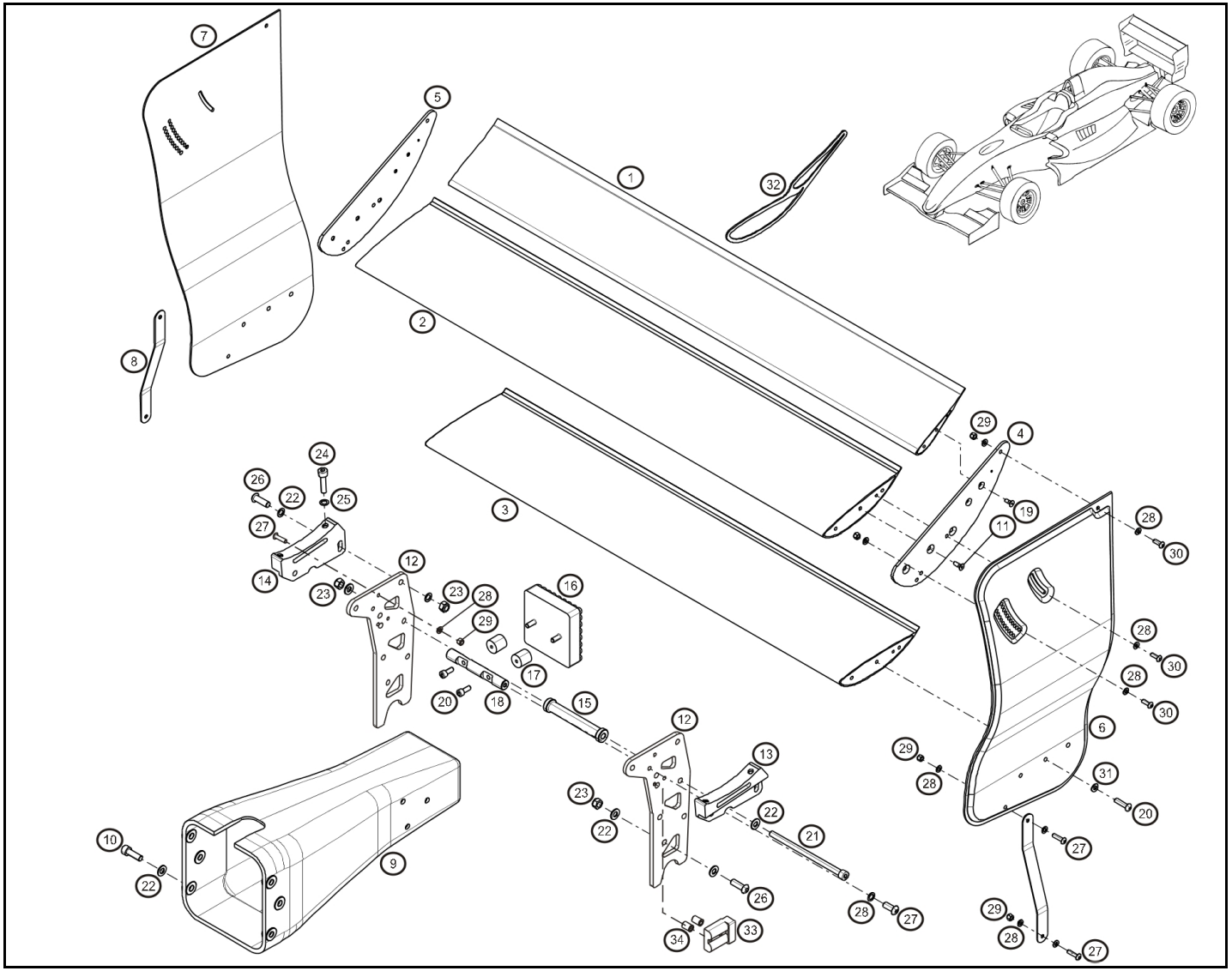

Rep.		Reference	Description	Coef
1	®	**77 11 166 652**	Rear top flap	1
2	®	**77 11 166 651**	Rear top wing	1
3	®	**77 11 166 650**	Rear lower mainplaine	1
4		**77 11 166 653**	LH fishplate	1
5		**77 11 166 654**	RH fishplate	1
6	®	**77 11 166 655**	LH Front wing endplate	1
7	®	**77 11 166 656**	RH Rear wing endplate	1
8	®	**77 11 166 657**	Rear wing floor stay	2
9	®	**77 11 166 642**	Rear crashbox	1
10		**77 11 153 535**	CHS Bolt M8-25	6
11		**77 11 166 177**	FHS Bolt M6-15	1
12	®	**77 11 166 646**	Rear wing support	2
13	®	**77 11 166 648**	Rear wing LH upper support	1
14	®	**77 11 166 649**	Rear wing RH upper support	1
15		**77 11 166 645**	Rear wing support spacer	1
16		**77 11 166 039**	Rain light	1
17		**77 11 166 644**	Rain light silentblox	2
18		**77 11 166 643**	Rain light support	1
19		**77 11 166 393**	FHS Bolt M5-10	1
20		**77 11 154 325**	Vis CBHC M6-16	6
21		**77 11 166 647**	Rear wing support screw	1
22		**77 11 154 791**	Washer	14
23		**77 03 034 237**	Locknut M8	11
24		**77 11 156 928**	CHS Bolt M8x125-30	4
25		**77 11 126 887**	Washer SPS Ø8	1
26		**77 11 158 363**	BHS Bolt M8-25	7
27		**77 11 154 862**	BHS Bolt M5-20	14
28		**77 11 154 878**	Washer Ø5	1
29		**77 03 034 007**	Locknut M5	8
30		**77 11 154 768**	Button head socket screw M5-16	8
31		**77 11 160 368**	Plain washer Ø6xØ121.2	6
32	®	**77 11 166 344**	Rear upper flaps link	1
33		**60 00 009 986**	Connector	1
34		**77 11 166 542**	Spacer	2

févr.-2013

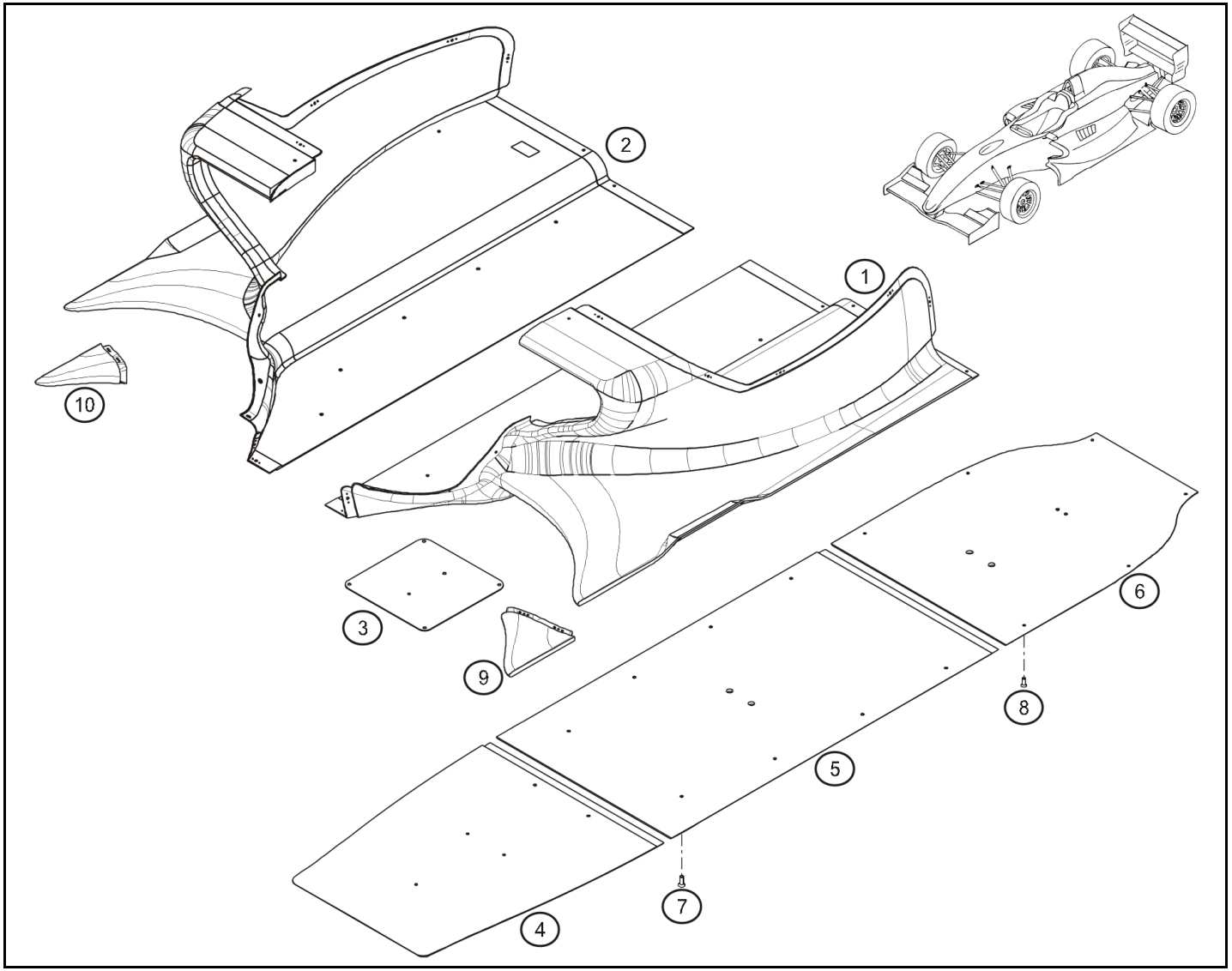

Rep.		Reference	Description	Coef
1	®	**77 11 166 817**	LH floor	1
2	®	**77 11 166 818**	RH floor	1
3	®	**77 11 166 793**	Plaque fermeture ECU	1
4	®	**77 11 166 800**	Planche AV	1
5	®	**77 11 166 801**	Planche centrale	1
6	®	**77 11 166 802**	Planche AR	1
7		**77 11 167 215**	FHS Bolt M6-20	10
8		**77 11 165 353**	FHS Bolt M5-20	9
9	®	**77 11 166 927**	Pointe de plancher G	1
10	®	**77 11 166 928**	Pointe de plancher D	1

janv.-2014

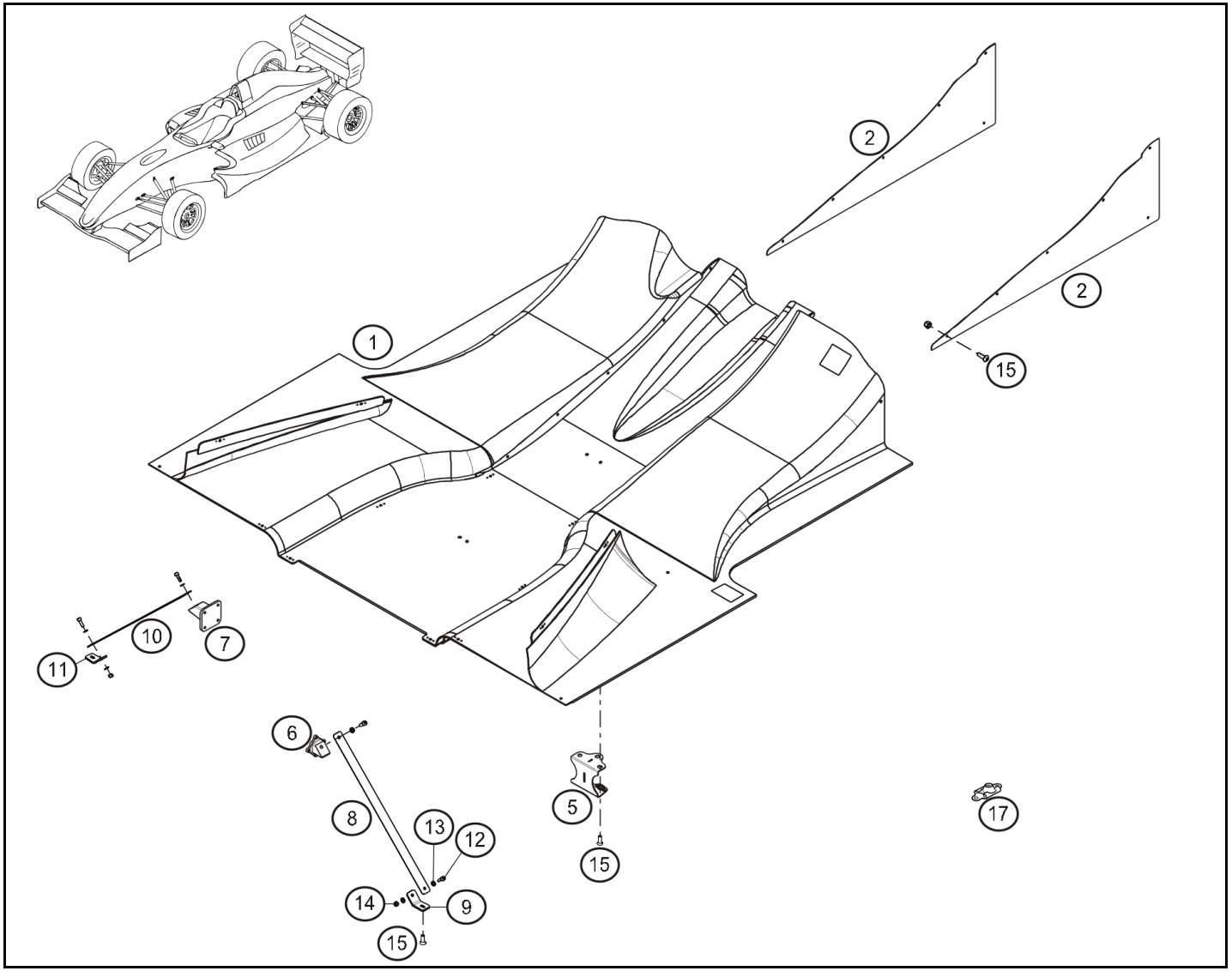

Rep.		Reference	Description	Coef
1	®	**77 11 166 819**	Diffuser	1
2	®	**77 11 166 870**	Dérive de diffuseur AR	2
5	®	**77 11 166 789**	Support BV / Diffuseur	1
6		**77 11 166 790**	Fixation G tirant sur BV	1
7		**77 11 166 791**	Fixation D tirant sur BV	1
8	®	**77 11 166 691**	LH floor stay Lg:375	1
9		**77 11 166 690**	LH oil tank stay bracket	1
10	®	**77 11 166 693**	RH floor stay Lg:395	1
11		**77 11 166 692**	RH oil tank stay bracket	1
12		**77 11 166 407**	CHS Bolt M5-12	4
13		**77 11 154 878**	Washer Ø5	6
14		**77 03 034 007**	Locknut M5	2
15		**77 03 008 220**	Screw RLX M5-12 cl:8.8	18
16		**77 11 154 733**	Nut-SIMMONDS M5	8
17		**77 11 065 787**	Ecrou à riveter Ø5	1
		77 11 064 614	Trapped nut M6	1

mars-2014

RENAULT SPORT

RENAULT

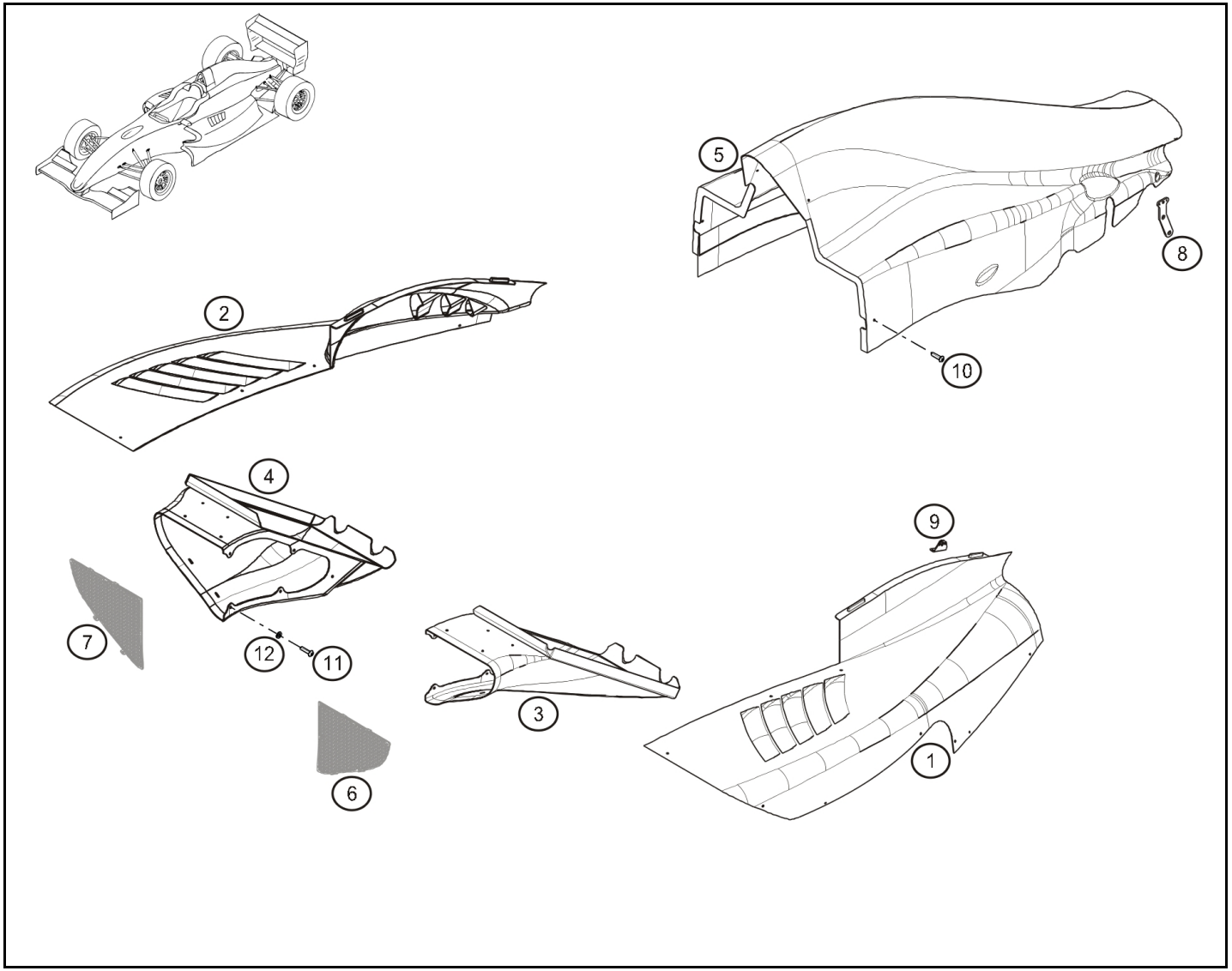

Rep.		Reference	Description	Coef
1	®	**77 11 166 820**	LH sidepod	1
2	®	**77 11 166 821**	RH sidepod	1
3	®	**77 11 166 822**	Ecope radia G	1
4	®	**77 11 166 823**	Ecope radia D	1
5	®	**77 11 166 824**	Engine cover	1
6		**77 11 166 787**	Grille G de radia	1
7		**77 11 166 788**	Grille D de radia	1
8	®	**77 11 166 774**	Support capot moteur AR	1
9		**77 11 166 777**	Support ponton / capot	2
10		**77 03 008 220**	Screw RLX M5-12 cl:8.8	26
11		**77 11 154 764**	BHS Bolt M5-12	10
12		**77 11 154 878**	Washer Ø5	10

juin-2013

RENAULT SPORT

RENAULT

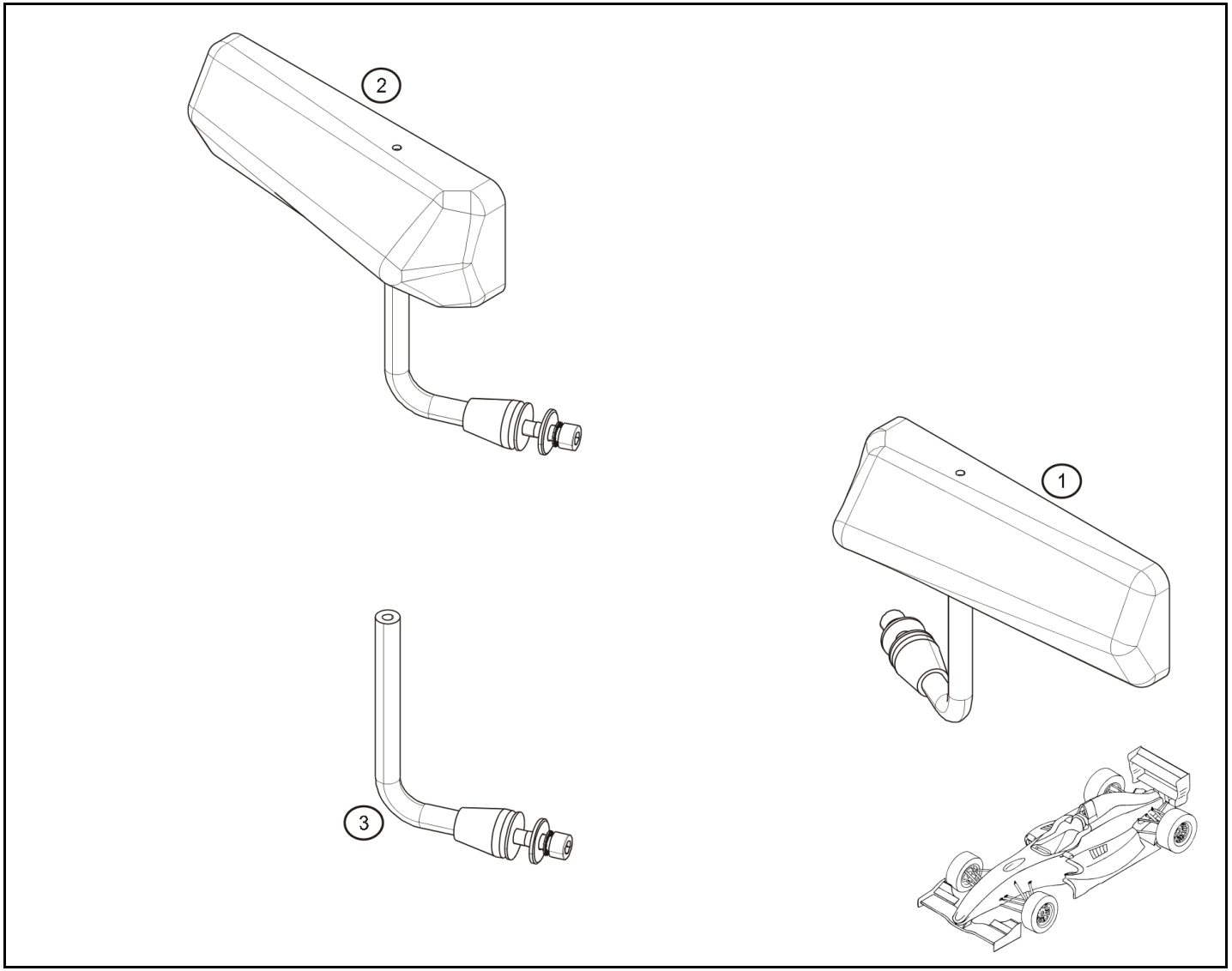

Rep.	Reference	Description	Coef
1	**77 11 165 880**	Rétro Evo G plat	1
	77 11 165 882	Rétro Evo G convexe	1
2	**77 11 165 881**	Rétro Evo D plat	1
	77 11 165 883	Rétro Evo D convexe	1
3	**77 11 165 879**	Bras de rétro évo	1

juin-2014

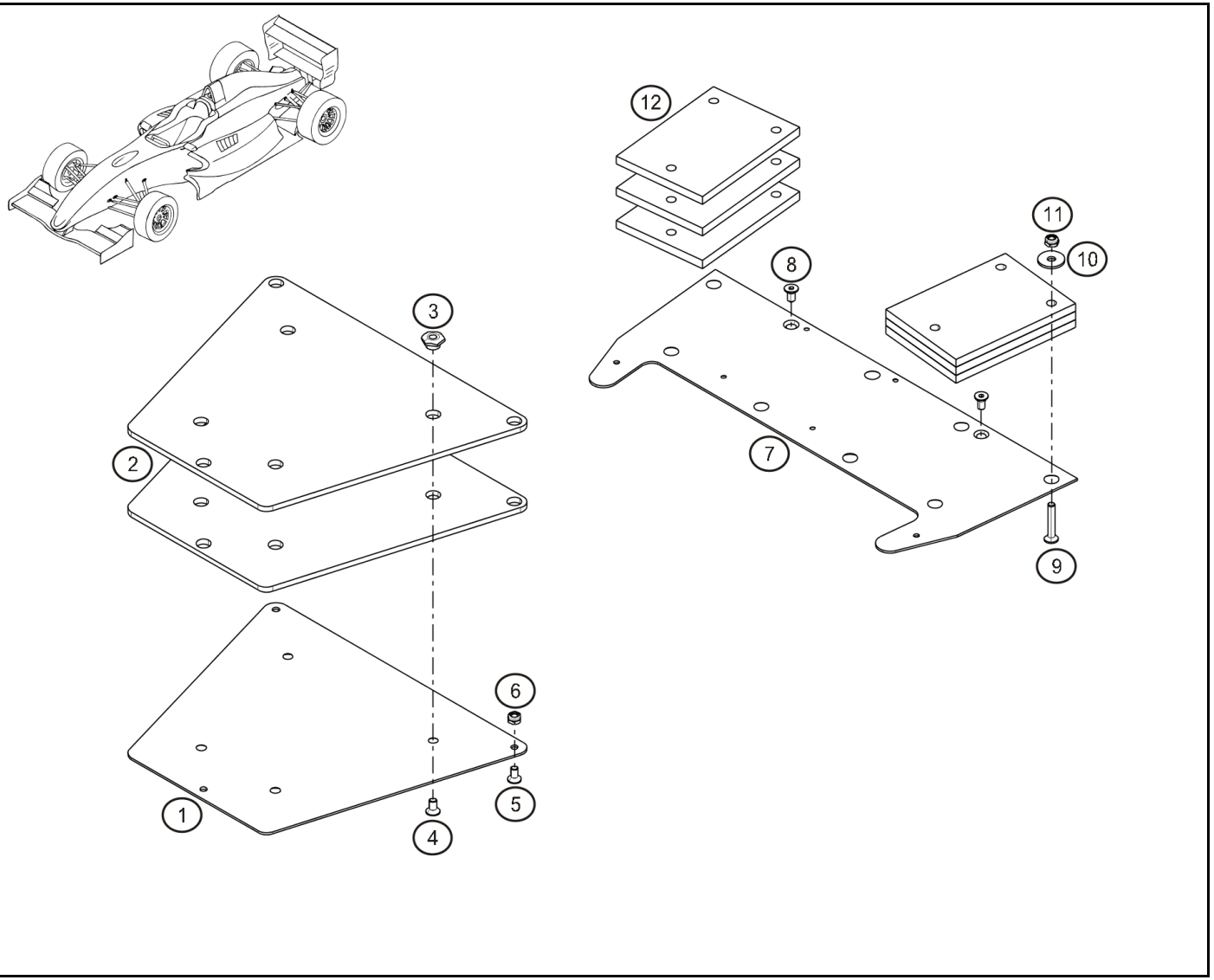

Rep.		Reference	Description	Coef
1		**77 11 166 854**	Plaque support lest AV	1
2		**77 11 166 855**	Lest AV 5mm	1
3		**77 11 166 856**	Ecrou fix lest AV	4
7	®	**77 11 166 857**	Support lest AR	1
8		**77 11 068 967**	FHS Bolt M6-15	2
9		**77 11 166 741**	FHS Bolt M10-100	1
12		**77 11 166 711**	Ballast 1Kg	1
		77 11 166 743	Ballast 2.5Kg	1

mars-2013

RENAULT SPORT

RENAULT

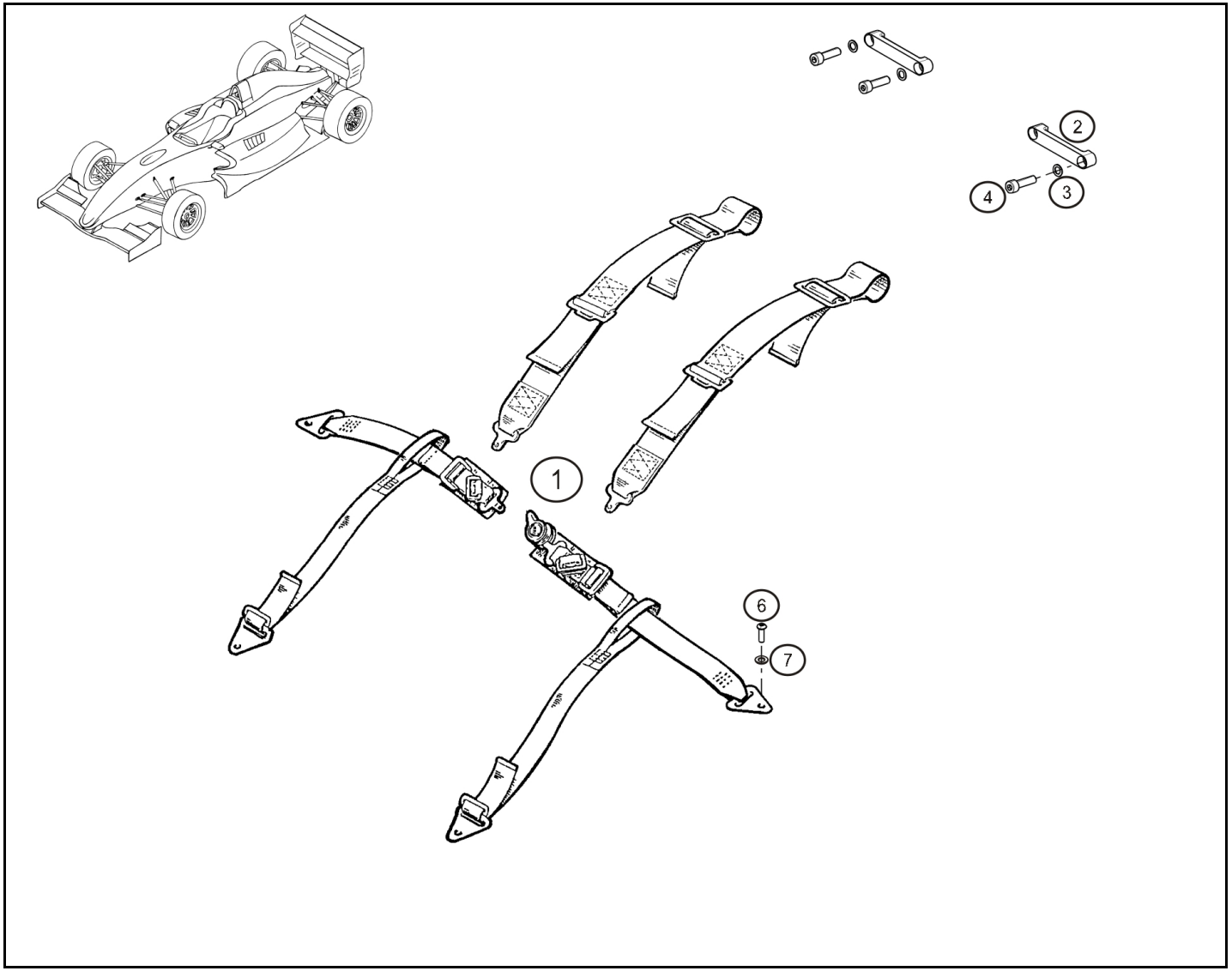

Rep.		Reference	Description	Coef
1		**77 11 166 200**	Seat belt	1
2	®	**77 11 166 595**	Seat belt support	2
3		**77 11 126 887**	Washer SPS Ø8	6
4		**77 11 156 928**	CHS Bolt M8x125-30	4

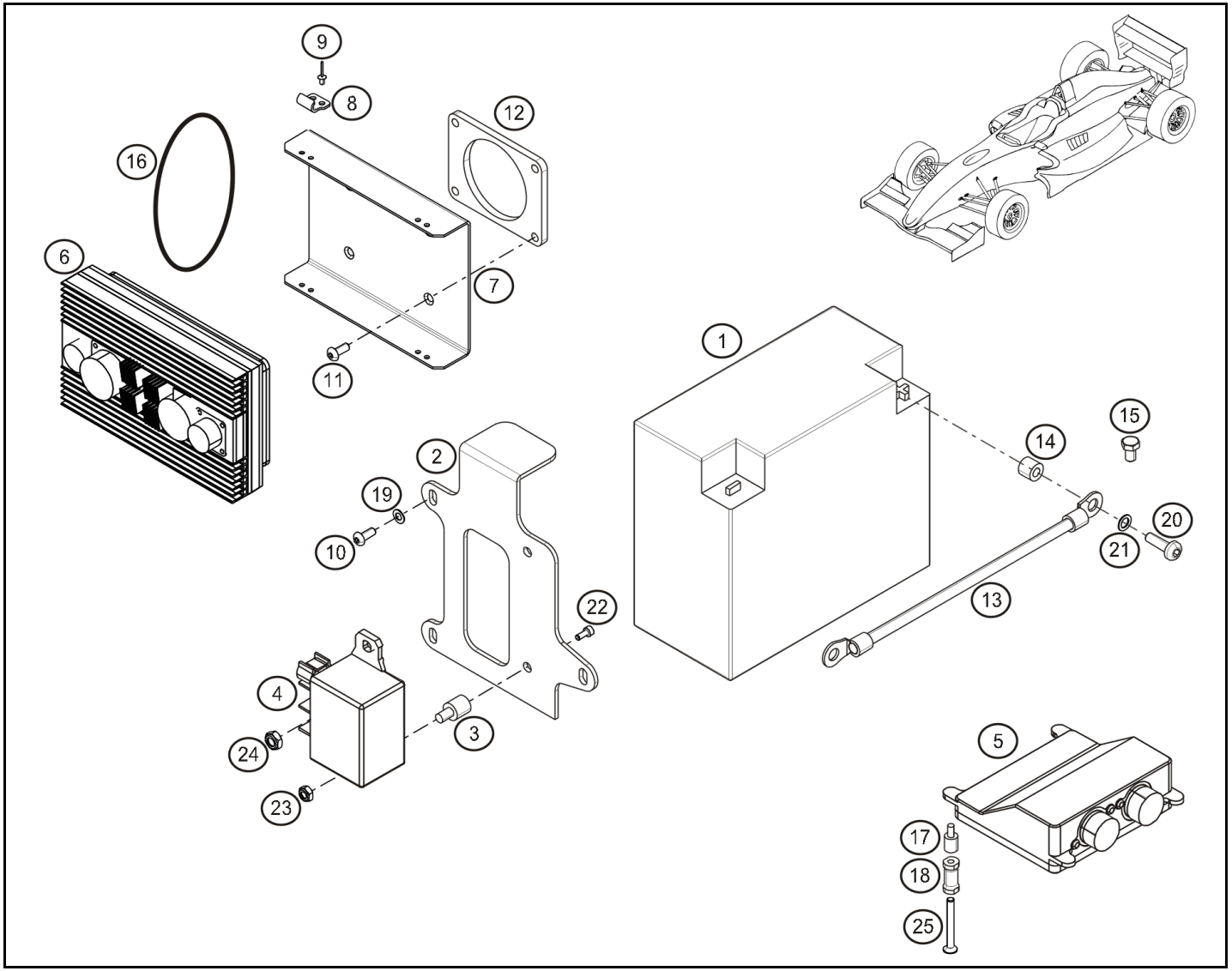

Rep.		Reference	Description	Coef
1		**77 11 154 321**	Battery	1
2	®	**77 11 166 799**	Plaque fix batterie	1
3		**77 11 166 345**	Silentbloc	2
4		**77 11 160 136**	Master Relay	1
5	®	**77 11 166 421**	Omega datalogger	1
6	®	**77 11 166 199**	XAP fusebox	1
7	®	**77 11 166 280**	XAP fusebox tray	1
8		**77 11 158 059**	Hanger	12
9		**77 11 166 142**	Rivet Ø3x8	8
10		**77 11 154 325**	Vis CBHC M6-16	3
11		**77 11 154 768**	Button head socket screw M5-16	4
12		**77 11 166 796**	Entretoise support CBNT	1
13		**77 11 166 740**	Long + battery loom	1
14		**77 11 166 737**	Battery spacer	2
15		**77 11 166 738**	Plastic HEX screw M6-10	1
16		**77 11 166 410**	O ring Ø75xØ3.5	2
17		**77 11 166 685**	Datalogger AV mounts kit	1
18		**77 11 166 797**	Entretoise Omega	4
19		**77 11 166 430**	Washer Ø6x20	3
20		**77 11 128 925**	CHS Bolt M6-20	2
21		**77 11 126 686**	Washer SPS Ø6	2
22		**77 11 166 393**	FHS Bolt M5-10	2
23		**77 11 154 733**	Nut-SIMMONDS M5	2
24		**77 03 033 027**	Nut M6	2
25		**77 11 154 900**	Screw M4-10	4
100		**00 11 154 321**	Battery charge plug	1

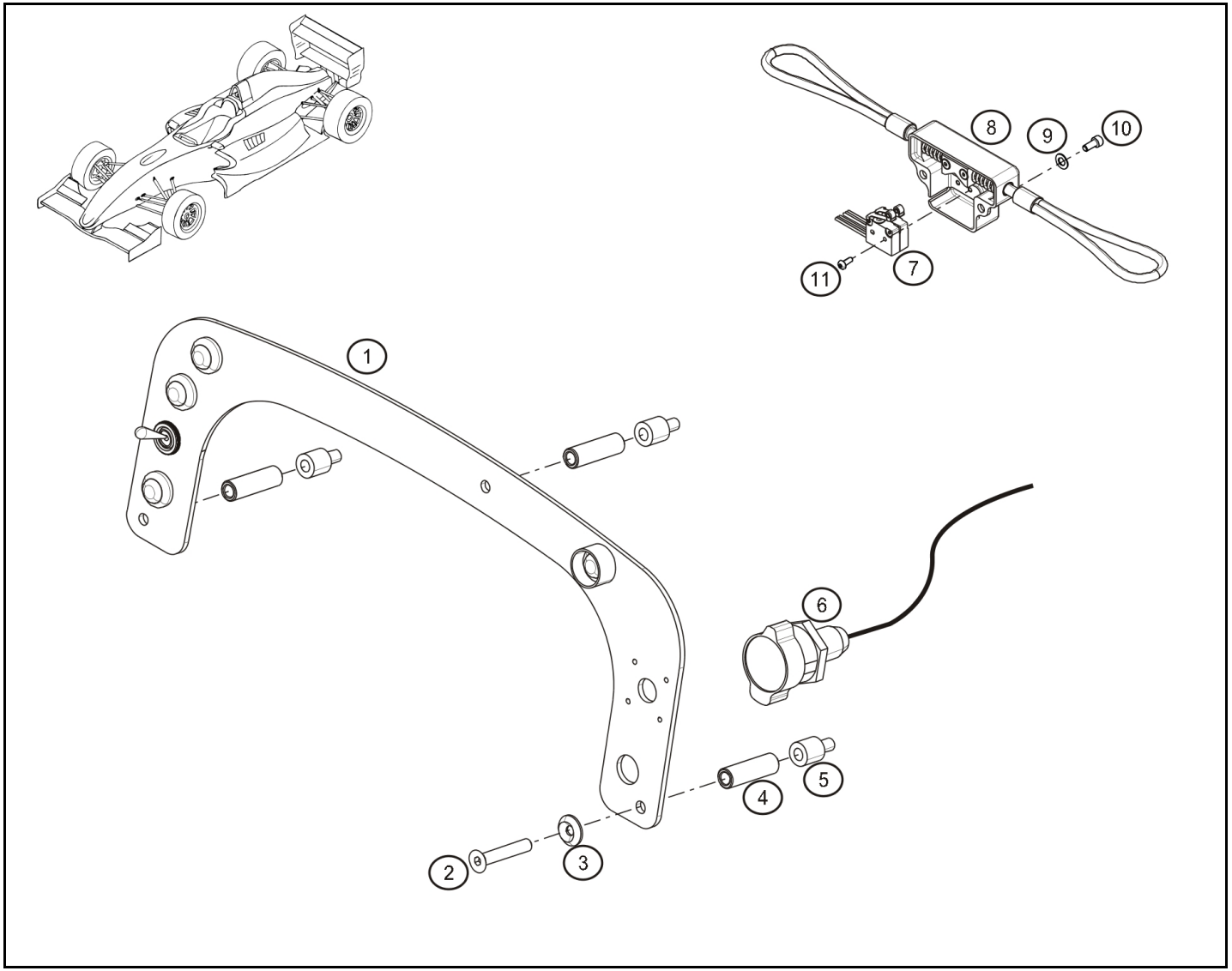

Rep.		Reference	Description	Coef
1	®	**77 11 166 196**	Switchplate	1
2		**77 11 160 551**	FHS Bolt M5-35	3
3		**77 11 166 688**	Conical washer Ø 5.2	3
4		**77 11 166 195**	Switchplate spacer	3
5		**77 11 166 345**	Silentbloc	3
6		**77 11 166 150**	Cable balance frein	1
7		**07 11 166 807**	Master Switch "électrique"	1
8		**00 11 166 807**	Master Switch "mécanique"	1
9		**77 11 166 407**	CHS Bolt M5-12	2
10		**77 11 126 780**	Washer SPS Ø5	2
11		**00 00 166 807**	Screw	2

mars-2013

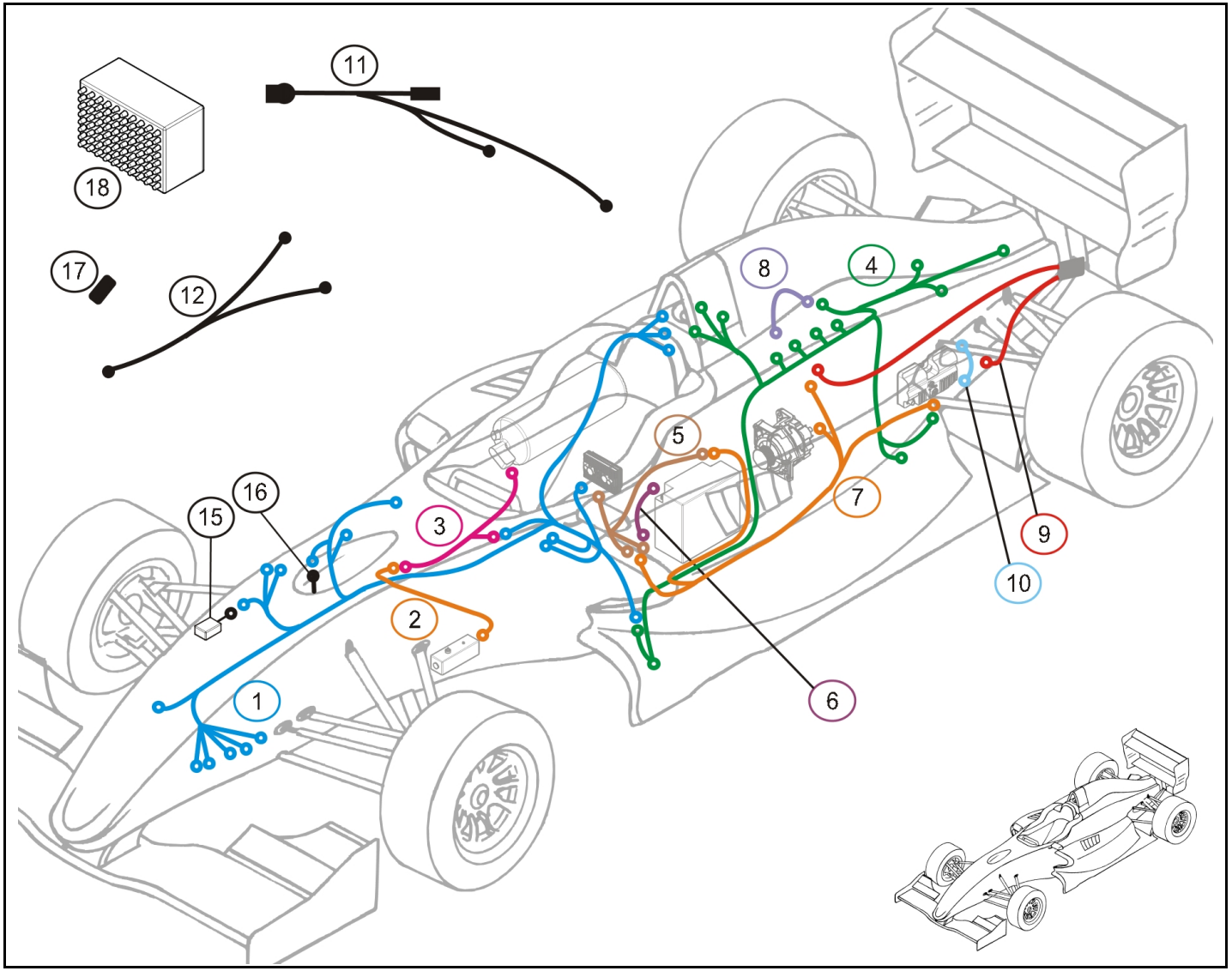

Rep.		Reference	Description	Coef
1		**77 11 166 751**	Chassis loom « evo2 »	1
2	†	**77 11 166 725**	Extinguisher command box loom	1
		77 11 166 762	SPA extinguisher simple loom 1(simple)	1
3	†	**77 11 166 726**	Lifeline extinguisher double loom	1
		77 11 166 763	SPA extinguisher double loom	1
4		**77 11 168 074**	Engine wiring harness 2015	1
5		**77 11 166 015**	Fusebox loom	1
6		**77 11 166 740**	Long + battery loom	1
7		**77 11 166 012**	Power loom	1
		77 11 166 890	Faisceau puissance démarreur	1
		77 11 166 891	Faisceau excitation démarreur	1
8		**77 11 166 339**	Crankshaft sensor loom	1
9		**77 11 166 014**	Jump battery loom	1
10		**77 11 166 013**	Ground loom	1
11		**77 11 166 419**	Battery charge loom	1
12		**77 11 166 197**	Download lead	1
15		**77 11 166 108**	Lap beacon transmitter	1
16		**00 11 166 011**	CAN end	1
17		**77 11 166 198**	PI dongle	1
18		**77 11 166 112**	Wall beacon	1
100		**77 11 166 035**	Bouton poussoir de vidange	1
101		**77 11 166 398**	Cablage Capteur push AV	1
102		**77 11 166 399**	Cablage Capteur push AR	1
103		**77 11 166 400**	Pitot sensor	1
104		**00 11 166 751**	Attache cable teflon	1
105		**77 11 166 703**	Master Switch loom	1

avr.-2015

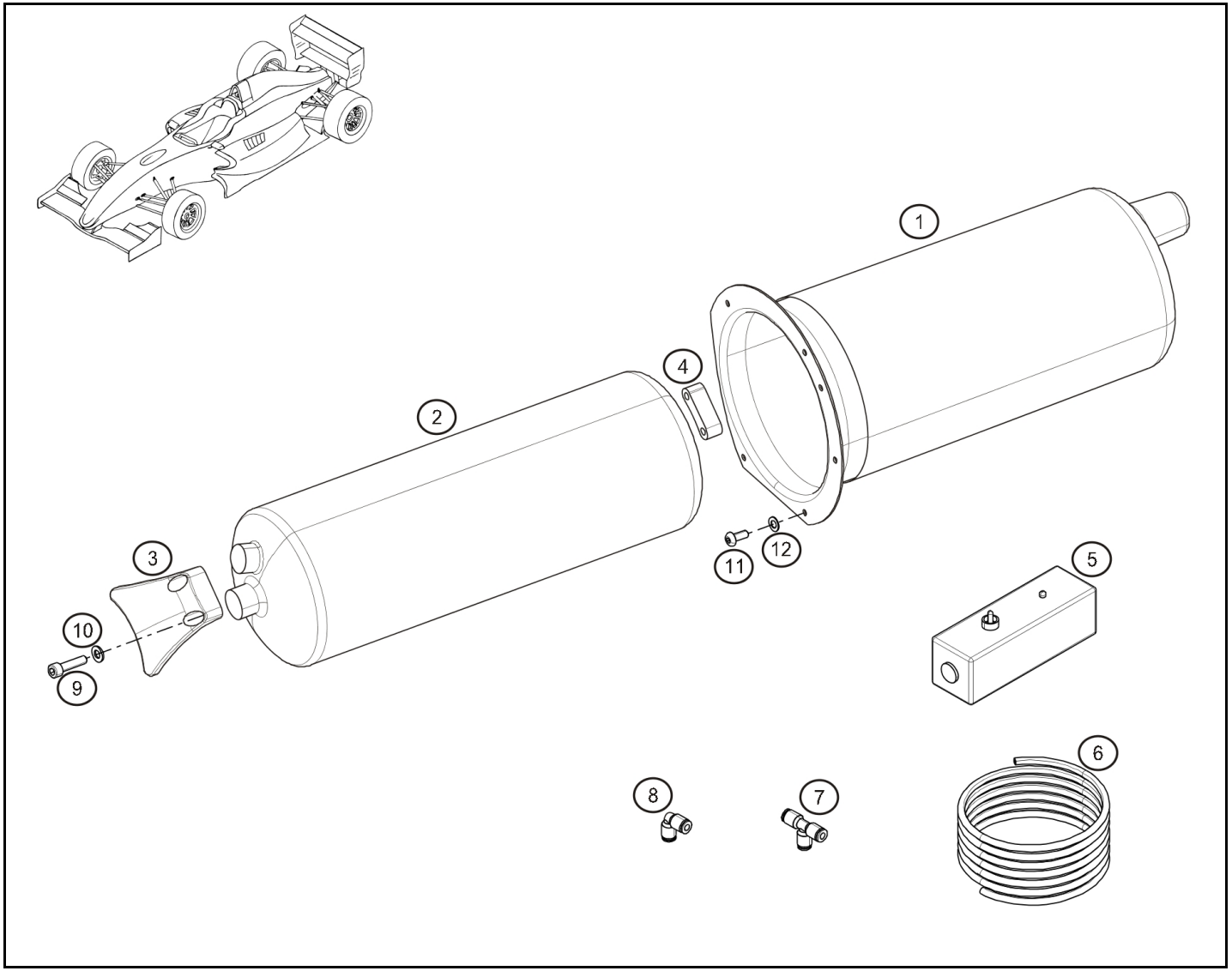

Rep.		Reference	Description	Coef
1		**77 11 166 781**	Bouteille support extincteur	1
2		**77 11 166 760**	SPA extinguisher	1
3		**77 11 166 782**	Arretoir extincteur	1
4		**77 11 166 783**	Cale arretoir extincteur	1
5	®	**77 11 166 761**	SPA fire extinguisher command box	1
6		**00 00 166 723**	Extinguisher pipe	1
9		**77 11 154 769**	Screw	2
10		**77 11 126 780**	Washer SPS Ø5	2
11		**77 11 154 764**	BHS Bolt M5-12	4
12		**77 11 166 867**	Washer ONDUFLEX Ø5	4

juin-2013

RENAULT SPORT

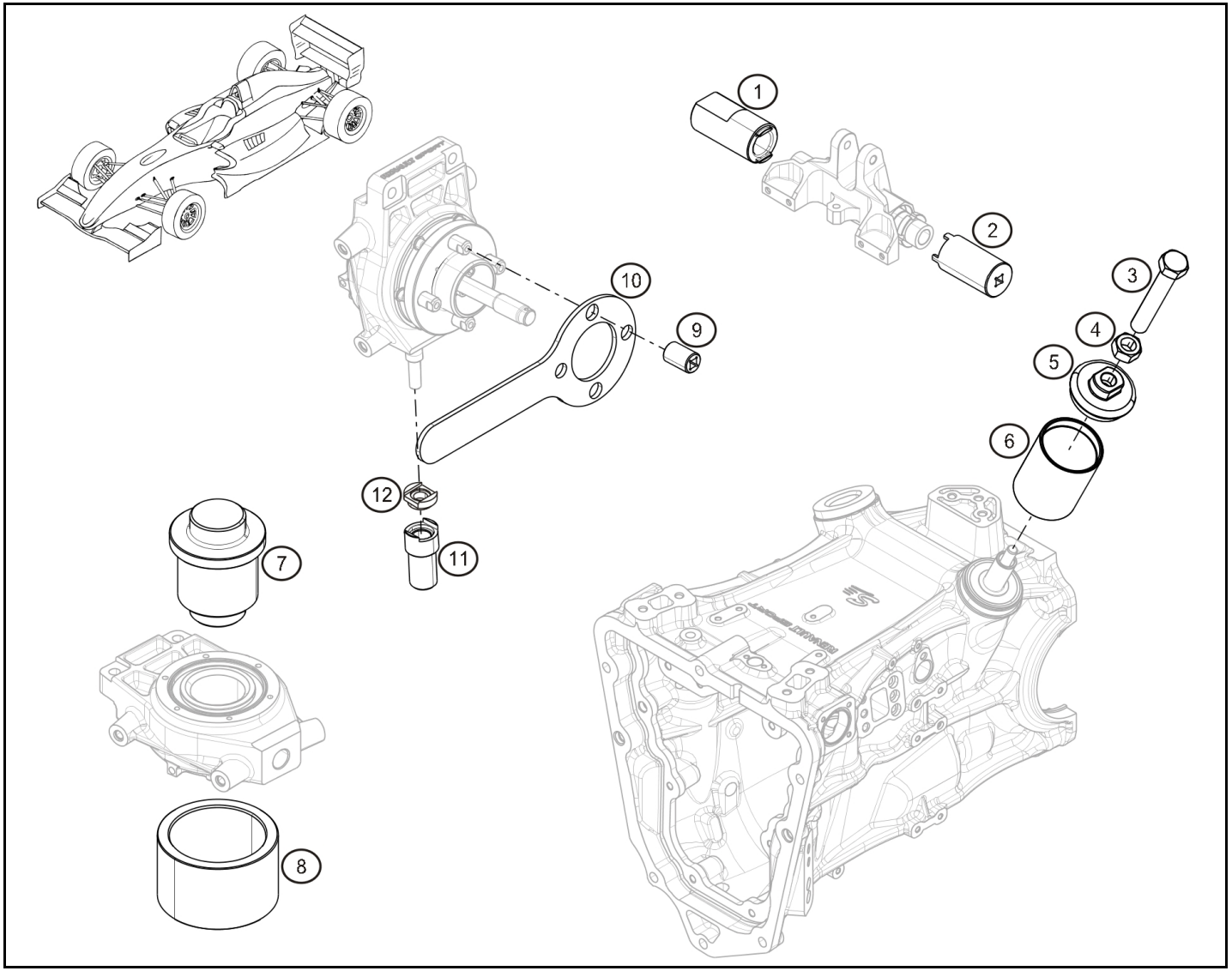

Rep.		Reference	Description	Coef
1		**00 11 166 503**	Rear rocker axle tool	1
2		**00 11 166 507**	Front rocker nut tool	1
3	®	**00 00 166 523**	Rear rocker tool	1
4		**07 11 166 523**	Rear rocker nut	1
5		**00 01 166 523**	Rear rocker tool cover plate	1
6		**00 11 166 523**	Rear rocker mounting tube	1
7		**00 11 166 008**	Wheelbearing mounting tool	1
8		**00 00 166 008**	Wheel bearing shim	1
9		**00 11 166 208**	Drive peg socket	1
10		**00 00 166 208**	Drive peg retaining tool	1
11		**77 11 166 699**	Socket for rear lower upright axle	1
12		**00 11 166 770**	Douille serrage axe evo porte moyeu AV	1

juil.-2013

RENAULT SPORT

RENAULT

PRICES 2015

Reference	Rate	Boards	Reference	Rate	Boards	Reference	Rate	Boards	Reference	Rate	Boards
00 00 166 008	48.22	99.00	01 00 201 020	.09	21.40	01 00 801 040	14.51	21.40	01 01 910 426	27.48	21.40
00 00 166 019	161.28	36.00	01 00 201 021	.45	21.40	01 00 901 004	14.66	21.40			38.00
00 00 166 208	41.20	99.00	01 00 201 104	1.05	21.10	01 01 202 004	3.69	21.10	01 01 910 427	507.02	21.40
00 00 166 523	51.91	99.00	01 00 201 105	.28	21.40	01 01 202 021	4.05	21.40	01 01 910 429	52.94	21.40
00 00 166 723	15.90	90.00	01 00 201 106	1.40	29.00	01 01 402 058	13.56	21.15	01 01 910 702	41.36	29.00
00 00 166 807	.75	83.00	01 00 201 145	.89	21.15	01 01 404 429	3.93	21.10	01 01 910 705	46.44	29.00
00 01 166 022		37.01	01 00 201 155	4.05	21.15	01 01 501 110	3.79	21.10	01 01 910 706	11.01	29.00
00 01 166 523		99.00	01 00 201 166	6.35	21.50	01 01 910 004	489.45	21.10	01 01 910 803	89.42	16.10
00 01 166 772	9.12	37.02	01 00 201 244	5.19	21.15	01 01 910 010	10.04	21.10	01 01 910 804	6.93	16.10
00 11 154 321		80.00	01 00 201 245	8.21	21.10	01 01 910 011	45.88	21.15	01 01 910 805	2.39	16.10
00 11 166 008	60.55	99.00	01 00 202 061	4.95	21.30	01 01 910 012	19.01	21.15	01 09 003 102	3.92	21.15
00 11 166 011	31.40	88.00	01 00 203 017	4.55	21.40	01 01 910 017	12.91	21.15	01 09 022 106	15.40	21.10
00 11 166 103	12.84	38.00	01 00 204 041	19.42	21.50	01 01 910 021	NC	21.15	01 09 024 005	40.42	21.20
00 11 166 124	65.00	19.50	01 00 204 042	12.79	21.10	01 01 910 028	66.42	21.10	01 09 907 010	.40	21.40
00 11 166 208		99.00	01 00 205 103	2.71	21.40	01 01 910 102	33.35	21.20	01 09 907 058	.87	21.40
00 11 166 243	29.82	31.00	01 00 301 007	.38	21.40	01 01 910 103	31.43	21.20	01 09 908 008	1.18	21.20
		33.00	01 00 301 077	.39	21.30	01 01 910 105	5.75	21.20	01 09 908 014	.81	29.00
00 11 166 283	5.00	22.00	01 00 301 138	.34	21.40	01 01 910 107	16.12	21.20	01 09 999 683	3.42	21.10
00 11 166 494	165.11	36.00	01 00 301 148	.14	21.40	01 01 910 108	29.08	21.20	01 14 044 031	91.75	21.40
00 11 166 503		99.00	01 00 301 276	1.18	21.40	01 01 910 110	150.75	21.20	01 19 100 251	41.02	21.15
00 11 166 507		99.00	01 00 301 291	.23	21.15	01 01 910 201	91.85	21.30	01 19 100 291	1830.67	21.10
00 11 166 523		99.00	01 00 301 327	.28	16.10	01 01 910 202	85.10	21.30	01 19 102 122	36.23	21.30
00 11 166 682	1595.86	31.40	01 00 301 373	1.52	21.40	01 01 910 203	94.47	21.30	01 19 102 123	36.23	21.30
00 11 166 683	1679.43	33.40	01 00 301 394	.27	21.50	01 01 910 204	50.33	21.30	01 19 102 591	69.07	21.40
00 11 166 751	.48	88.00	01 00 301 424	2.22	21.10	01 01 910 206	49.52	21.30	01 19 103 211	260.17	21.50
00 11 166 770	71.74	99.00	01 00 301 490		29.00	01 01 910 209	67.13	21.30	01 19 104 171	80.73	21.40
00 11 166 778	8.74	40.00	01 00 301 525	.65	21.10	01 01 910 210	31.84	21.30	01 19 104 301	153.56	21.40
00 11 166 795	6.64	40.50	01 00 301 526	.66	21.10	01 01 910 211	21.03	21.30	01 19 104 311	132.01	21.40
00 11 166 807		83.00	01 00 301 532	.32	21.10	01 01 910 213	28.44	21.30	01 19 107 001	NC	29.00
00 11 166 842	379.29	20.00	01 00 301 540	.67	16.10	01 01 910 214	15.02	21.30	01 19 107 051	54.87	29.00
00 11 166 858	4.84	19.30	01 00 303 038	.25	21.15	01 01 910 216	73.33	21.30	01 90 030 404	95.13	21.40
00 11 166 861	1.57	37.02	01 00 303 045	.30	21.15	01 01 910 217	90.80	21.30	01 91 030 742	40.71	21.50
01 00 059 021	11.20	21.40	01 00 303 062		29.00	01 01 910 250	128.94	21.30	01 91 030 743	40.71	21.50
01 00 059 022	9.53	21.40	01 00 305 061	.44	16.10	01 01 910 300	401.44	21.50	01 91 030 744	40.71	21.50
01 00 059 027	17.35	21.40	01 00 305 098	7.63	21.50	01 01 910 305	71.99	21.50	02 01 100 280	6.68	21.10
01 00 059 035	3.07	21.10	01 00 403 031	.50	21.40	01 01 910 306	37.64	21.50	07 11 155 389	66.12	17.00
01 00 059 049	3.20	21.40			38.00	01 01 910 308	34.54	21.50	07 11 166 008	7.96	31.40
01 00 077 120	5.90	21.40	01 00 499 005		21.10	01 01 910 309	30.14	21.50			33.40
01 00 085 908	25.00	21.50	01 00 499 010	2.39	21.40	01 01 910 310	91.17	21.50	07 11 166 238	4.51	33.40
01 00 085 981	4.97	16.10	01 00 599 032	6.48	21.20	01 01 910 311	81.28	21.50	07 11 166 523		99.00
01 00 085 982	1.80	38.00	01 00 599 037	4.45	21.40	01 01 910 313	33.06	21.50	07 11 166 807	70.97	83.00
01 00 101 004	6.37	21.40	01 00 601 001	.29	21.40	01 01 910 314	33.06	21.50	07 11 166 812	.21	40.50
01 00 101 050	5.30	21.40	01 00 601 005	.85	21.20	01 01 910 403	109.45	21.40	07 11 166 842	86.08	20.00
01 00 101 054	46.34	21.50			21.30	01 01 910 404	74.22	21.40	07 11 166 858	3.02	19.30
01 00 101 071	7.17	21.40	01 00 602 015	.41	21.10	01 01 910 405	55.50	21.40	07 11 166 879	144.91	22.00
01 00 103 012	70.90	21.20			21.40	01 01 910 408	26.02	21.40	10 80 131 224	238.55	21.20
01 00 103 024	41.60	21.30	01 00 602 025	5.09	21.50	01 01 910 410	12.93	21.40			21.30
01 00 103 049	38.69	21.20	01 00 602 043	1.22	21.10	01 01 910 411	3.95	21.40	10 80 191 232	674.36	21.20
01 00 105 066	13.40	21.30	01 00 602 045	.30	21.40	01 01 910 412	14.76	21.40			21.30
01 00 106 001	5.06	21.40	01 00 701 069	.13	21.40	01 01 910 419	44.26	21.40	19 10 205 305	6.70	21.30
01 00 106 021	11.09	21.40	01 00 801 026	7.77	21.40	01 01 910 420	8.43	21.40	19 10 205 310	6.70	21.30
01 00 201 017	1.10	21.40	01 00 801 027	9.62	21.40	01 01 910 425	10.16	21.40	19 10 205 315	6.70	21.30

PRICES 2015

Reference	Rate	Boards	Reference	Rate	Boards	Reference	Rate	Boards	Reference	Rate	Boards
19 10 205 320	6.70	21.30	33 80 131 619	213.49	21.20			34.00			19.30
19 10 205 325	6.70	21.30			21.30			37.00			32.00
19 10 205 330	6.70	21.30	33 80 131 622	213.49	21.20			37.01			36.00
19 10 205 335	6.70	21.30			21.30			38.50			38.00
19 10 205 340	6.70	21.30	33 80 132 120	213.49	21.20	77 03 034 106	NC	16.00			38.50
19 10 205 345	6.70	21.30			21.30			19.80			41.00
19 10 205 350	6.70	21.30	33 80 132 424	213.49	21.20			40.10			80.00
19 10 205 355	6.70	21.30			21.30	77 03 034 237	NC	33.40	77 11 126 780	.15	19.30
19 10 205 360	6.70	21.30	33 80 132 628	213.49	21.20			37.00			32.00
19 10 205 365	6.70	21.30			21.30			41.50			83.00
19 10 205 370	6.70	21.30	60 00 009 986	32.26	41.50	77 03 034 249		21.15			90.00
19 10 205 375	6.70	21.30	66 61 910 000	70.38	21.90	77 03 053 075		16.00	77 11 126 887	.40	20.00
19 10 205 380	6.70	21.30	66 61 910 007	87.58	21.90	77 03 053 400	.33	12.00			31.40
19 10 205 385	6.70	21.30	66 61 910 100	20.84	21.90	77 03 062 014	1.25	21.10			32.00
19 10 205 390	6.70	21.30	66 61 910 110	78.75	21.90	77 03 062 062		21.10			33.00
19 10 205 395	6.70	21.30	66 61 910 400	17.11	21.90			21.15			33.40
19 10 205 400	6.70	21.30	66 61 910 405	214.00	21.90	77 03 065 311	NC	11.00			34.00
19 10 205 405	6.70	21.30	66 69 003 021	83.42	21.90	77 03 066 085	NC	29.00			35.00
19 10 205 410	6.70	21.30	66 69 004 604	51.71	21.90	77 03 074 105	NC	12.00			36.00
19 10 205 415	6.70	21.30	66 69 004 606	63.55	21.90	77 03 074 259	.84	12.00			37.00
19 10 205 420	6.70	21.30	77 00 107 192	13.59	11.00	77 03 074 312	.84	12.00			41.00
19 10 205 425	6.70	21.30	77 00 659 822	NC	10.70	77 03 075 076	NC	21.10			41.50
19 10 205 430	6.70	21.30	77 01 047 893		11.00	77 03 083 334		19.00			59.20
19 10 320 210	8.52	21.50	77 01 407 061	NC	22.00	77 03 090 115	NC	10.60	77 11 127 025	9.61	29.00
19 10 320 215	8.52	21.50	77 01 407 072	NC	19.30	77 03 101 546		16.00	77 11 127 480	.53	38.00
19 10 320 220	8.52	21.50	77 03 002 030		12.00	77 05 005 278	NC	12.50	77 11 127 832	2.29	37.00
19 10 320 225	8.52	21.50	77 03 002 053		12.00			17.00	77 11 128 280	.79	10.70
19 10 320 230	8.52	21.50			12.50	77 11 050 540	.53	34.00			16.00
19 10 320 235	8.52	21.50			17.00	77 11 050 600	.88	17.00	77 11 128 658	.34	16.00
19 10 320 240	8.52	21.50	77 03 002 646		11.00			37.00			21.15
19 10 320 245	8.52	21.50	77 03 002 661		11.00			37.01			38.50
19 10 320 250	8.52	21.50	77 03 005 265		10.00	77 11 050 623	NC	10.70	77 11 128 925	1.08	10.80
19 10 320 255	8.52	21.50	77 03 008 220	.14	40.50	77 11 050 940	2.57	17.00			11.00
19 10 320 260	8.52	21.50			42.10	77 11 051 236	.66	10.80			32.00
19 10 320 265	8.52	21.50			43.00	77 11 051 271	2.12	16.00			37.01
19 10 320 270	8.52	21.50	77 03 009 026	NC	16.00	77 11 051 273	.94	16.00			41.00
19 10 320 275	8.52	21.50	77 03 017 139		10.00			21.15			80.00
19 10 320 280	8.52	21.50	77 03 033 009		19.00	77 11 064 215	1.13	11.00	77 11 128 929	1.92	32.00
19 10 320 285	8.52	21.50	77 03 033 027	NC	80.00	77 11 064 614	5.30	42.10	77 11 128 989	1.42	11.00
19 10 320 290	8.52	21.50	77 03 033 107		19.50	77 11 064 819	.53	19.80	77 11 129 246	.84	10.00
19 10 320 295	8.52	21.50	77 03 033 135	NC	19.00			21.15	77 11 129 526	40.52	29.00
19 10 320 300	8.52	21.50	77 03 034 007	NC	13.50			31.00	77 11 129 633	1.92	20.00
19 10 320 305	8.52	21.50			16.00	77 11 065 248	.97	19.80	77 11 150 452	31.20	19.50
19 10 320 310	8.52	21.50			19.30	77 11 065 268	10.73	10.70	77 11 153 535	1.37	33.00
19 10 320 315	8.52	21.50			32.00	77 11 065 787	7.08	42.10			34.00
19 10 320 320	8.52	21.50			34.00	77 11 068 222	1.60	17.00			41.50
19 10 320 325	8.52	21.50			37.01	77 11 068 418	1.37	31.00	77 11 153 613	7.82	12.50
19 10 320 330	8.52	21.50			41.00			33.00	77 11 154 150	65.69	29.00
19 10 320 335	8.52	21.50			41.50	77 11 068 967	.90	57.00			33.40
19 10 320 340	8.52	21.50			42.10	77 11 126 315	1.94	10.80	77 11 154 167	5.26	29.00
33 80 131 423	213.49	21.20	77 03 034 008	NC	16.00			40.10	77 11 154 175	76.63	29.00
		21.30			17.00	77 11 126 686	.24	16.00	77 11 154 199	1.20	20.00

PRICES 2015

Reference	Rate	Boards
77 11 154 202	3.82	10.60
77 11 154 203	.15	16.00
77 11 154 227	19.82	10.70
77 11 154 249	5.04	10.70
		19.00
77 11 154 321	171.18	80.00
77 11 154 325	.69	38.50
		41.50
		80.00
77 11 154 471	9.65	31.40
		33.40
77 11 154 658	28.84	19.30
77 11 154 689	22.90	21.15
77 11 154 700	3.64	31.00
77 11 154 715	3.64	34.00
77 11 154 733	1.76	13.50
		42.10
		80.00
77 11 154 744	1.03	19.80
		21.15
77 11 154 763	.82	34.00
77 11 154 764	1.48	13.50
		43.00
		90.00
77 11 154 768	NC	13.50
		41.00
		41.50
		80.00
77 11 154 769	1.58	19.30
		34.00
		90.00
77 11 154 791	.51	19.50
		19.80
		31.00
		34.00
		35.00
		38.50
		40.00
		41.50
77 11 154 862	1.60	41.00
		41.50
77 11 154 878	.79	13.50
		19.30
		22.00
		32.00
		34.00
		41.00
		41.50
		42.10
		43.00
77 11 154 886	1.90	38.50
77 11 154 900	1.57	80.00

Reference	Rate	Boards
77 11 154 904	1.01	33.40
		35.00
77 11 154 905	1.77	37.00
77 11 154 909	1.19	19.80
		31.00
		34.00
		40.10
77 11 154 997	279.22	12.50
77 11 155 257	.59	36.00
77 11 155 391	50.03	17.00
77 11 155 392	65.53	17.00
77 11 156 269	69.59	19.30
77 11 156 510	30.00	19.00
77 11 156 532	.42	20.00
		37.02
		37.80
77 11 156 647	10.28	13.50
77 11 156 704	17.82	21.10
77 11 156 901	1.03	19.80
77 11 156 918	.14	10.70
		16.00
		17.00
77 11 156 928	.90	31.00
		34.00
		37.00
		40.00
		41.00
		41.50
		59.20
77 11 156 938	.99	17.00
77 11 156 940	.93	37.00
		41.00
77 11 156 946	.03	11.00
		34.00
77 11 156 958	.81	16.10
		22.00
		41.00
77 11 156 960	.87	16.00
		19.80
		20.00
		37.00
77 11 156 977	NC	38.50
77 11 157 155	7.36	17.00
77 11 157 208	28.65	17.00
77 11 158 036	4.77	37.01
77 11 158 059	2.49	17.00
		80.00
77 11 158 075	35.93	19.30
77 11 158 219	4.54	17.00
77 11 158 250	9.54	13.50
77 11 158 342	.47	32.00
		34.00

Reference	Rate	Boards
77 11 158 344	.45	17.00
77 11 158 346	.53	38.50
77 11 158 350	1.36	36.00
77 11 158 363	.88	41.50
77 11 158 448	.45	19.30
77 11 158 514	97.15	19.30
77 11 158 572	.23	37.01
77 11 158 586	1.36	37.01
77 11 158 892	107.10	08.00
77 11 159 333	.96	37.01
77 11 159 347	.91	37.01
77 11 159 396	.91	41.00
77 11 159 445	25.43	31.00
		33.00
77 11 159 447	3.90	31.00
77 11 159 495	2.68	32.00
77 11 159 591	78.57	31.00
		31.40
		33.00
		33.40
77 11 159 603	5.74	34.00
77 11 159 635	.51	34.00
77 11 159 636	1.26	34.00
77 11 159 639	47.67	34.00
77 11 159 640	59.82	34.00
77 11 159 647	1.70	34.00
		37.01
77 11 159 770	NC	36.01
77 11 159 853	3.98	36.00
77 11 160 027	14.97	17.00
77 11 160 032	139.33	12.50
77 11 160 136	NC	80.00
77 11 160 200	2.81	12.50
77 11 160 227	84.20	17.00
77 11 160 278	14.87	17.00
77 11 160 284	99.75	11.00
77 11 160 328	93.31	12.00
77 11 160 368	.16	10.80
		16.00
		17.00
		19.00
		37.00
		37.01
		38.50
		40.10
		41.00
		41.50
77 11 160 382	24.18	17.00
77 11 160 551	1.32	83.00
77 11 160 577	NC	11.00
77 11 160 656	9.31	19.50
77 11 160 680	47.72	12.50

Reference	Rate	Boards
77 11 160 902	37.11	17.00
77 11 161 845	20.06	19.30
77 11 162 233	.72	22.00
77 11 162 609	66.50	08.00
77 11 162 634	27.55	11.00
		17.00
		21.15
77 11 162 707	12.66	19.30
77 11 163 133	1.95	40.00
77 11 163 602	11.50	12.50
		19.30
77 11 165 096	3.98	31.00
		31.40
		36.00
77 11 165 188	2.72	20.00
77 11 165 201	14.17	37.01
77 11 165 202	14.17	37.01
77 11 165 203	14.17	37.01
77 11 165 212	1.65	36.00
77 11 165 353	.93	37.00
		42.00
77 11 165 450	40.80	13.50
77 11 165 627	.17	19.30
		32.00
77 11 165 879	26.32	56.20
77 11 165 880	55.27	56.20
77 11 165 881	55.27	56.20
77 11 165 882	83.62	56.20
77 11 165 883	83.62	56.20
77 11 166 001	654.68	36.00
77 11 166 003	380.30	10.60
77 11 166 006	176.66	35.00
77 11 166 007	176.66	35.00
77 11 166 008	61.22	31.40
		33.40
77 11 166 009	59.68	10.70
77 11 166 012	81.24	88.00
77 11 166 013	44.30	88.00
77 11 166 014	60.75	88.00
77 11 166 015	208.86	88.00
77 11 166 020	307.19	35.00
77 11 166 021	318.16	35.00
77 11 166 031	310.00	32.00
77 11 166 032	300.00	34.00
77 11 166 033	300.00	34.00
77 11 166 034	159.15	16.00
77 11 166 035	74.84	88.00
77 11 166 036	21.13	19.30
77 11 166 039	163.63	41.50
77 11 166 040	104.38	32.00
77 11 166 041	102.15	32.00
		34.00

PRICES 2015

Reference	Rate	Boards	Reference	Rate	Boards	Reference	Rate	Boards	Reference	Rate	Boards
77 11 166 042	104.38	32.00	77 11 166 114	21.92	19.50			32.00			33.40
		34.00	77 11 166 115	4.68	19.50	77 11 166 177	NC	19.30	77 11 166 227	11.65	31.40
77 11 166 043	26.36	10.70	77 11 166 116	21.92	19.50			31.40			33.40
77 11 166 045	158.34	37.00	77 11 166 117	3.65	19.50			37.00	77 11 166 229	394.37	33.40
77 11 166 048	15.20	10.80	77 11 166 120	669.20	19.50			41.50	77 11 166 234	69.93	33.40
		17.00	77 11 166 121	705.32	19.50	77 11 166 181	2.22	31.00	77 11 166 235	69.93	33.40
77 11 166 049	NC	19.80	77 11 166 122	271.07	19.50	77 11 166 182	1.71	32.00	77 11 166 236	3.77	31.40
77 11 166 053	67.47	10.60	77 11 166 124		19.50	77 11 166 184	4.67	32.00	77 11 166 237	4.75	33.40
77 11 166 056	63.63	10.00	77 11 166 125	47.82	20.00	77 11 166 185	NC	31.40	77 11 166 239	3.83	33.40
77 11 166 058	1.43	12.00	77 11 166 127	13.89	08.00			33.00	77 11 166 240	4.12	33.40
77 11 166 060	119.33	12.00	77 11 166 128	3.66	20.00			36.00	77 11 166 241	386.61	31.00
77 11 166 061	70.43	13.50	77 11 166 129	85.60	10.80	77 11 166 187	2.79	31.00	77 11 166 242	386.61	31.00
77 11 166 062	82.35	12.00	77 11 166 131	71.10	12.50			33.00	77 11 166 243	250.02	31.00
77 11 166 063	78.99	16.00	77 11 166 132	55.68	12.50	77 11 166 188	2.79	33.00	77 11 166 244	193.37	31.00
77 11 166 064	5.42	16.00	77 11 166 134	88.34	37.80			33.40			35.00
77 11 166 065	4.61	16.00	77 11 166 135	43.88	37.80	77 11 166 189	2.95	32.00	77 11 166 245	129.73	31.00
77 11 166 066	56.34	16.00	77 11 166 136	50.71	37.80			34.00	77 11 166 246	140.04	31.00
77 11 166 067	30.64	16.00	77 11 166 137	73.18	37.80	77 11 166 190	4.41	34.00	77 11 166 247	4.32	31.00
77 11 166 068	1.65	16.00	77 11 166 138	28.17	21.15	77 11 166 191	5.35	33.00	77 11 166 248	4.21	31.00
		21.15	77 11 166 139	22.21	37.80	77 11 166 194	1.72	19.30	77 11 166 249	5.99	31.00
77 11 166 069	29.51	16.00	77 11 166 141	104.38	34.00	77 11 166 195	6.20	83.00			35.00
77 11 166 070	88.27	11.00	77 11 166 142	.13	17.00	77 11 166 196	235.60	83.00	77 11 166 250	173.66	31.00
77 11 166 072	92.41	11.00			38.50	77 11 166 197	177.84	88.00	77 11 166 254	57.43	31.00
77 11 166 073	37.50	19.00			80.00	77 11 166 198	1241.34	88.00			33.00
77 11 166 074	2.81	19.00	77 11 166 143	5.04	21.15	77 11 166 199	706.53	80.00	77 11 166 255	179.38	33.00
77 11 166 075	5.38	19.00	77 11 166 144	5.21	29.00	77 11 166 200	252.25	59.20	77 11 166 256	401.95	33.00
77 11 166 077	.92	10.80			33.40	77 11 166 201	782.98	31.40	77 11 166 257	401.95	33.00
77 11 166 078	1.97	22.00	77 11 166 150	141.28	83.00			33.40	77 11 166 258	265.87	33.00
77 11 166 079	124.93	22.00	77 11 166 151	14.11	40.10	77 11 166 202	306.87	31.40	77 11 166 259	162.12	33.00
77 11 166 087	1.01	10.80	77 11 166 152	17.92	40.10	77 11 166 203	51.91	31.40	77 11 166 260	1.59	33.00
77 11 166 088	2.08	12.00	77 11 166 153	17.55	40.10	77 11 166 205	.39	31.40	77 11 166 265	4.03	33.00
77 11 166 089	11.21	12.00	77 11 166 154	4.01	19.80			33.40	77 11 166 268	4.92	33.00
77 11 166 090	185.12	29.00	77 11 166 155	306.27	19.80	77 11 166 206	12.50	31.40	77 11 166 269	63.52	33.00
77 11 166 091	NC	16.00	77 11 166 156	339.10	19.80			33.40	77 11 166 271	184.95	33.00
77 11 166 092	31.64	17.00	77 11 166 157	339.10	19.80	77 11 166 207	205.07	31.40	77 11 166 272	6.88	31.00
77 11 166 093	24.57	22.00	77 11 166 158	NC	19.80			33.40	77 11 166 273	2.37	32.00
77 11 166 095	4.68	10.80	77 11 166 159	1.87	19.80	77 11 166 209	7.35	31.40	77 11 166 274	4.62	32.00
77 11 166 096	104.25	10.80	77 11 166 160	1.95	19.80			33.40	77 11 166 275	4.82	32.00
77 11 166 097	144.98	10.80	77 11 166 161	346.03	19.30	77 11 166 213	65.52	31.40	77 11 166 280	29.87	80.00
77 11 166 099	NC	21.00	77 11 166 162	259.52	19.30			33.40	77 11 166 281	1.11	10.80
77 11 166 101	195.22	21.40	77 11 166 163	70.02	19.30	77 11 166 218	24.57	31.40	77 11 166 282	60.42	22.00
77 11 166 102	2403.63	38.00	77 11 166 164	60.72	19.30			33.40	77 11 166 284	10.32	22.00
77 11 166 103	1662.53	38.00	77 11 166 165	6.92	19.30	77 11 166 219	8.85	31.40	77 11 166 285	1.24	19.30
77 11 166 104	246.85	36.00	77 11 166 166	5.82	19.30			33.40	77 11 166 286	.35	19.30
77 11 166 105	115.24	31.40	77 11 166 167	27.08	19.30	77 11 166 220	236.28	31.40	77 11 166 287	3.30	19.30
77 11 166 106	282.39	32.00	77 11 166 168	7.25	19.30	77 11 166 221	236.28	31.40	77 11 166 289	5.65	12.00
		34.00	77 11 166 169	11.92	19.30	77 11 166 222	5.10	31.40	77 11 166 290	17.72	10.00
77 11 166 107	115.86	32.00	77 11 166 170	40.52	19.30	77 11 166 223	5.45	31.40	77 11 166 291	13.82	17.00
77 11 166 108	226.66	88.00	77 11 166 171	1.13	19.30	77 11 166 224	5.10	31.40	77 11 166 292	14.53	17.00
77 11 166 109	282.39	37.80	77 11 166 173	2.49	19.30			33.40	77 11 166 293	7.53	17.00
77 11 166 111		21.10	77 11 166 174	30.72	19.30	77 11 166 225	5.10	31.40	77 11 166 294	7.62	17.00
77 11 166 112	563.20	88.00	77 11 166 176	2.98	19.30	77 11 166 226	5.10	31.40	77 11 166 295	NC	10.80

PRICES 2015

Reference	Rate	Boards	Reference	Rate	Boards	Reference	Rate	Boards	Reference	Rate	Boards
77 11 166 296	13.89	10.80			34.00	77 11 166 398	157.29	88.00	77 11 166 471	46.18	37.01
77 11 166 297	2.43	10.80			37.00	77 11 166 399	156.86	88.00	77 11 166 472	27.54	37.01
77 11 166 298	7.93	10.80			37.01	77 11 166 400	727.38	88.00	77 11 166 473	5.37	37.01
77 11 166 299	58.19	10.80	77 11 166 368	.17	31.40	77 11 166 403	42.46	19.80	77 11 166 474	14.72	37.01
77 11 166 314	NC	10.70			33.00	77 11 166 406	.71	36.00	77 11 166 475	34.45	37.01
77 11 166 315	NC	10.70			33.40	77 11 166 407	NC	83.00			38.50
77 11 166 317	NC	10.70	77 11 166 369	.11	32.00			42.10	77 11 166 476	13.58	37.01
77 11 166 318	NC	10.70	77 11 166 370	.17	32.00	77 11 166 408	NC	41.00	77 11 166 477	16.90	37.01
77 11 166 319	NC	10.70			33.40	77 11 166 410	2.30	80.00	77 11 166 480	NC	37.00
77 11 166 320	NC	10.70	77 11 166 371	.11	31.40	77 11 166 411	26.87	17.00	77 11 166 481	133.35	37.01
77 11 166 321	NC	10.70			33.00	77 11 166 412	3.72	17.00	77 11 166 482	115.63	37.01
77 11 166 322	NC	10.70			36.00	77 11 166 413	.39	19.50	77 11 166 485	30.06	37.00
77 11 166 323	3.40	10.80	77 11 166 372	.23	31.00	77 11 166 419	NC	88.00			37.01
77 11 166 324	1.42	10.70			31.40	77 11 166 420	2072.97	17.00	77 11 166 487	33.69	37.01
77 11 166 326	3.96	10.70			32.00	77 11 166 421	1731.22	80.00			37.02
77 11 166 329	7.02	10.70			33.00	77 11 166 422	247.23	38.00	77 11 166 488	141.51	36.00
77 11 166 336	3.91	10.80			33.40	77 11 166 423	26.33	38.00	77 11 166 490	15.25	36.00
77 11 166 337		11.00			34.00	77 11 166 424	26.11	38.00	77 11 166 491	160.25	36.00
77 11 166 338	9.71	19.00			36.00	77 11 166 425	2.19	38.00	77 11 166 495	113.97	36.00
77 11 166 339	72.64	17.00			37.00	77 11 166 426	20.85	38.00	77 11 166 497	4.88	36.00
		88.00			37.01	77 11 166 427	5.23	38.00	77 11 166 498	7.93	36.00
77 11 166 340	29.82	33.00	77 11 166 373	.30	33.00	77 11 166 430	.23	40.10	77 11 166 499	33.73	36.00
77 11 166 344	12.07	41.50	77 11 166 374	.30	31.40			80.00	77 11 166 500	29.72	32.00
77 11 166 345	4.67	83.00			33.40	77 11 166 439	.28	37.01	77 11 166 501	59.74	32.00
		80.00	77 11 166 375	1.66	31.00	77 11 166 440	6.07	10.00	77 11 166 502	232.78	32.00
77 11 166 349	108.58	13.50	77 11 166 376	2.31	31.40	77 11 166 441	.59	37.01	77 11 166 503	112.37	32.00
77 11 166 350	542.60	19.00			33.40	77 11 166 442	1.80	37.00	77 11 166 504	215.85	32.00
77 11 166 351	124.76	19.00			34.00	77 11 166 443	1.87	37.00	77 11 166 505	215.85	32.00
77 11 166 352	13.82	19.00			37.00	77 11 166 444	.17	37.00	77 11 166 506	7.25	32.00
77 11 166 353	1.58	19.00			37.01	77 11 166 446	18.17	37.01	77 11 166 507	22.92	32.00
77 11 166 354	12.02	19.00	77 11 166 378	.77	37.00	77 11 166 447	8.55	37.00	77 11 166 508	12.39	32.00
77 11 166 355	120.59	19.00			37.01	77 11 166 449	35.38	37.00	77 11 166 509	113.74	32.00
77 11 166 356	8.75	19.00	77 11 166 379	1.06	37.00	77 11 166 450	83.22	37.00	77 11 166 510	2.08	32.00
77 11 166 357	2.18	10.70	77 11 166 381	1.05	37.00	77 11 166 451	83.22	37.00	77 11 166 511	3.52	32.00
		19.00	77 11 166 382	.82	37.00	77 11 166 452	NC	37.01	77 11 166 512	23.15	32.00
		22.00	77 11 166 385	1.63	31.00	77 11 166 453	92.70	37.00	77 11 166 513	6.73	32.00
77 11 166 358	69.97	19.00			33.00	77 11 166 454	13.17	37.00	77 11 166 514	4.03	32.00
77 11 166 359	135.29	19.00			36.00	77 11 166 455	6.15	37.00	77 11 166 515	NC	32.00
77 11 166 360	12.39	19.00	77 11 166 386	2.44	31.00	77 11 166 456	59.80	37.00	77 11 166 516	12.39	32.00
77 11 166 361	.77	19.00			33.00	77 11 166 457	7.83	37.00	77 11 166 517	7.98	32.00
77 11 166 362	214.11	19.00	77 11 166 387	1.63	33.00	77 11 166 458	8.19	37.00	77 11 166 518	NC	32.00
77 11 166 363	3.55	19.00	77 11 166 390	57.12	08.00	77 11 166 459	3.89	37.00	77 11 166 519	7.25	32.00
77 11 166 364	20.54	19.00	77 11 166 391	1.12	37.01	77 11 166 460	109.49	37.00	77 11 166 520	NC	32.00
77 11 166 365	13.92	22.00	77 11 166 392	.51	32.00	77 11 166 461	6.15	37.00	77 11 166 521	89.88	32.00
77 11 166 366	.11	31.00			34.00	77 11 166 462	8.19	37.00			40.00
		31.40	77 11 166 393	.11	32.00	77 11 166 463	NC	37.00	77 11 166 522	33.73	34.00
		33.00			41.50	77 11 166 464	35.92	37.00	77 11 166 523	62.37	34.00
		36.00			80.00	77 11 166 465	59.24	37.00	77 11 166 524	3.28	34.00
77 11 166 367	.17	31.00	77 11 166 394	.86	34.00	77 11 166 466	49.59	37.00	77 11 166 525	3.56	34.00
		31.40	77 11 166 396	.66	34.00	77 11 166 467	23.18	37.00	77 11 166 526	17.77	34.00
		33.00	77 11 166 397	.39	19.30	77 11 166 468	20.93	37.00	77 11 166 527	228.35	34.00
		33.40			32.00	77 11 166 470	3.82	37.00	77 11 166 528	120.19	34.00

PRICES 2015

Reference	Rate	Boards
77 11 166 529	NC	34.00
77 11 166 530	7.17	34.00
77 11 166 531	18.72	34.00
77 11 166 532	120.19	34.00
77 11 166 533	181.78	34.00
77 11 166 534	3.92	34.00
77 11 166 535	54.27	32.00
77 11 166 536	25.96	34.00
77 11 166 537	53.14	34.00
77 11 166 538	53.23	34.00
77 11 166 539	NC	34.00
77 11 166 540	10.83	34.00
77 11 166 542	3.89	34.00
		41.50
77 11 166 543	NC	34.00
77 11 166 544	13.11	34.00
77 11 166 545	13.58	34.00
77 11 166 546	13.92	34.00
77 11 166 547	NC	34.00
77 11 166 548	4.01	34.00
77 11 166 549	9.99	35.00
77 11 166 550	17.12	35.00
77 11 166 551	11.70	35.00
77 11 166 552	2.02	35.00
77 11 166 555	29.40	36.00
		36.01
77 11 166 556	23.17	36.01
77 11 166 557	5.90	36.01
77 11 166 558	2.23	36.01
77 11 166 559	NC	36.01
77 11 166 560	.72	36.01
77 11 166 561	7.90	36.01
77 11 166 563	11.19	36.01
77 11 166 564	1.94	36.01
77 11 166 565	1.94	36.01
77 11 166 566	1.94	36.01
77 11 166 567	1.94	36.01
77 11 166 568	9.33	36.01
77 11 166 569	77.82	36.01
77 11 166 570	77.82	36.01
77 11 166 571	15.62	36.01
77 11 166 572	2.24	36.01
77 11 166 573	2.24	36.01
77 11 166 574	2.24	36.01
77 11 166 575	2.24	36.01
77 11 166 576	13.72	36.01
77 11 166 577	1.17	36.01
77 11 166 578	.96	36.01
77 11 166 579	.80	36.00
77 11 166 580	53.82	37.01
		38.50
77 11 166 581	NC	38.50

Reference	Rate	Boards
77 11 166 582	13.17	38.50
77 11 166 583	NC	38.50
77 11 166 584	9.03	38.50
77 11 166 585	6.92	38.50
77 11 166 586	21.82	38.00
77 11 166 587	.50	31.40
		36.00
77 11 166 595	76.49	59.20
77 11 166 633	883.41	41.00
77 11 166 638	312.12	41.00
77 11 166 639	312.12	41.00
77 11 166 640	26.40	41.00
77 11 166 641	26.40	41.00
77 11 166 642	1198.34	41.50
77 11 166 643	26.77	41.50
77 11 166 644	5.10	41.50
77 11 166 645	22.58	41.50
77 11 166 646	61.56	41.50
77 11 166 647	11.34	41.50
77 11 166 648	82.69	41.50
77 11 166 649	84.12	41.50
77 11 166 650	999.20	41.50
77 11 166 651	505.28	41.50
77 11 166 652	309.80	41.50
77 11 166 653	49.30	41.50
77 11 166 654	49.30	41.50
77 11 166 655	415.09	41.50
77 11 166 656	415.09	41.50
77 11 166 657	11.84	41.50
77 11 166 663	2.37	36.01
77 11 166 664		36.01
77 11 166 665	951.81	19.30
77 11 166 669	49.30	19.00
77 11 166 670	24.10	40.00
77 11 166 671	NC	37.01
		37.02
77 11 166 679	406.93	20.00
77 11 166 680	914.73	31.40
77 11 166 681	921.65	33.40
77 11 166 682	1595.86	31.40
77 11 166 683	1679.43	33.40
77 11 166 685		80.00
77 11 166 687	22.26	10.00
77 11 166 688	.17	83.00
		41.00
77 11 166 690	17.72	42.10
77 11 166 691	16.86	42.10
77 11 166 692	17.72	42.10
77 11 166 693	15.95	42.10
77 11 166 697	5.80	37.01
77 11 166 698	1.94	12.50
		19.30

Reference	Rate	Boards
77 11 166 699	75.26	99.00
77 11 166 700	116.39	36.01
77 11 166 701	149.20	36.01
77 11 166 703	30.72	88.00
77 11 166 704	269.86	37.01
77 11 166 707	6.75	32.00
77 11 166 708	NC	38.00
77 11 166 711	50.18	57.00
77 11 166 712	75.13	12.00
77 11 166 714	.73	31.40
		33.40
77 11 166 715	48.03	21.00
77 11 166 716	69.87	21.00
77 11 166 717	15.74	29.00
77 11 166 718	62.23	33.40
77 11 166 719	32.07	31.40
		33.40
77 11 166 720	453.90	40.00
77 11 166 721	486.19	19.50
77 11 166 725	31.28	88.00
77 11 166 726	31.28	88.00
77 11 166 727	103.27	19.30
77 11 166 728	12.61	38.00
77 11 166 729	29.39	38.50
77 11 166 730	29.39	38.50
77 11 166 731	28.74	38.50
77 11 166 732	30.07	38.50
77 11 166 733	94.08	36.00
77 11 166 735	72.08	17.00
77 11 166 736	9.69	19.00
77 11 166 737	6.84	80.00
77 11 166 738	.42	80.00
77 11 166 740	22.40	88.00
		80.00
77 11 166 741	5.88	57.00
77 11 166 743		57.00
77 11 166 745	2.90	36.00
77 11 166 746	9.89	38.00
77 11 166 747	576.92	36.00
77 11 166 748	6.09	36.00
77 11 166 749	24.61	31.40
		33.40
77 11 166 751	1966.85	88.00
77 11 166 752	124.10	12.00
77 11 166 753	116.97	17.00
77 11 166 754	123.72	17.00
77 11 166 755	180.39	19.30
77 11 166 756	145.70	17.00
77 11 166 757	46.84	10.00
77 11 166 758		10.00
77 11 166 759	364.00	32.00
		34.00

Reference	Rate	Boards
77 11 166 760	449.06	90.00
77 11 166 761	142.94	90.00
77 11 166 762	11.86	88.00
77 11 166 763	27.65	88.00
77 11 166 764	259.82	31.40
77 11 166 765	334.12	33.40
77 11 166 766	65.52	31.40
		33.40
77 11 166 767	32.46	33.00
77 11 166 768	251.60	16.10
77 11 166 769	64.21	16.10
77 11 166 770	54.25	31.40
77 11 166 771	.31	21.15
		36.00
77 11 166 772	19.65	37.02
77 11 166 773	14.71	37.02
77 11 166 774	18.15	43.00
77 11 166 776	15.44	40.00
77 11 166 777	16.40	43.00
77 11 166 778	34.88	40.00
77 11 166 779	15.87	40.00
77 11 166 780	10.18	19.00
77 11 166 781		90.00
77 11 166 782	136.14	90.00
77 11 166 783	18.93	90.00
77 11 166 787	75.27	43.00
77 11 166 788	75.27	43.00
77 11 166 789	68.86	42.10
77 11 166 790	56.30	21.40
		42.10
77 11 166 791	48.20	21.40
		42.10
77 11 166 792	45.22	37.00
77 11 166 793	32.54	42.00
77 11 166 794	28.24	40.00
77 11 166 795	9.82	40.00
77 11 166 796	16.40	80.00
77 11 166 797	NC	80.00
77 11 166 798	10.27	40.00
77 11 166 799	19.66	80.00
77 11 166 800	110.66	42.00
77 11 166 801	179.37	42.00
77 11 166 802	101.52	42.00
77 11 166 803	98.26	16.10
77 11 166 804	21.32	40.00
77 11 166 805	53.37	13.50
77 11 166 808	73.75	37.00
77 11 166 809	71.07	37.00
77 11 166 810		40.00
77 11 166 811	835.10	40.00
77 11 166 812	733.03	40.50
77 11 166 813	946.20	40.50

PRICES 2015

Reference	Rate	Boards	Reference	Rate	Boards	Reference	Rate	Boards	Reference	Rate	Boards
77 11 166 814	249.80	40.10			90.00	77 11 166 919	19.73	08.00			
77 11 166 815	407.24	40.50	77 11 166 868	.10	37.00	77 11 166 920	20.00	31.40			
77 11 166 816	384.40	40.50	77 11 166 870	43.10	42.10			33.40			
77 11 166 817	1627.13	42.00	77 11 166 877	2.58	33.00	77 11 166 921	3.69	31.40			
77 11 166 818	1627.13	42.00	77 11 166 878	3.87	31.00			33.40			
77 11 166 819	1746.21	42.10	77 11 166 884	5.60	22.00	77 11 166 922	187.89	17.00			
77 11 166 820	1129.54	43.00	77 11 166 885	23.40	22.00	77 11 166 923	16.00	40.50			
77 11 166 821	1129.54	43.00	77 11 166 886	.25	22.00	77 11 166 925	2.80	21.15			
77 11 166 822	398.40	43.00	77 11 166 887	33.75	21.15	77 11 166 927	260.00	42.00			
77 11 166 823	398.40	43.00	77 11 166 888	11.16	21.15	77 11 166 928	260.00	42.00			
77 11 166 824	1248.99	43.00	77 11 166 890	55.26	88.00	77 11 167 215	.11	42.00			
77 11 166 825	1143.03	13.50	77 11 166 891	26.42	88.00	77 11 167 720	204.17	41.00			
77 11 166 826	36.52	13.50	77 11 166 892	2856.00	36.00	77 11 167 721	7.50	41.00			
77 11 166 827	28.35	40.10	77 11 166 893	376.60	36.00	77 11 168 074	1988.41	88.00			
77 11 166 828	28.35	40.10	77 11 166 894	2.37	36.01	79 03 062 105	2.16	12.50			
77 11 166 829	341.27	40.50	77 11 166 895	2.37	36.01	82 00 033 408	13.26	10.70			
77 11 166 830	1931.37	40.50	77 11 166 896		36.01	82 00 073 370		10.70			
77 11 166 831	130.30	41.00	77 11 166 897	2.37	36.01	82 00 197 717		17.00			
77 11 166 832	130.30	41.00	77 11 166 898	2.37	36.01	82 00 317 471		11.00			
77 11 166 833	9.47	41.00	77 11 166 899		36.01	82 00 490 282		12.00			
77 11 166 834	9.47	41.00	77 11 166 900	133.35	37.01	82 00 490 285		12.00			
77 11 166 835	56.36	31.00	77 11 166 901	490.00	31.40	82 00 539 341		12.00			
77 11 166 837	14.12	40.00	77 11 166 902	490.00	31.40	82 00 590 563	NC	11.00			
77 11 166 838	90.30	20.00	77 11 166 903	490.00	33.40	82 00 608 653		10.60			
77 11 166 839	95.81	20.00	77 11 166 904	490.00	33.40	82 00 717 383		12.00			
77 11 166 840	483.75	20.00	77 11 166 905	220.00	31.40	82 00 806 731		10.70			
77 11 166 841	188.30	20.00			33.40	93 01 910 011	2092.77	21.30			
77 11 166 842	94.15	20.00	77 11 166 906	220.00	31.40			21.50			
77 11 166 843	238.96	20.00			33.40						
77 11 166 844	227.12	20.00	77 11 166 907	160.00	31.40						
77 11 166 845	238.96	20.00			33.40						
77 11 166 846	279.48	20.00	77 11 166 908	NC	31.40						
77 11 166 847	NC	21.15			33.40						
77 11 166 848	50.00	38.00	77 11 166 909	140.00	31.40						
77 11 166 850	92.21	33.00			33.40						
77 11 166 851	4.69	33.00	77 11 166 910	140.00	31.40						
77 11 166 852	92.21	33.00			33.40						
77 11 166 853	4.12	33.00	77 11 166 911	243.28	31.40						
77 11 166 854	18.61	57.00			33.40						
77 11 166 855	18.39	57.00	77 11 166 912	59.37	31.40						
77 11 166 856	10.54	57.00			33.40						
77 11 166 857	28.95	57.00	77 11 166 913	148.54	31.40						
77 11 166 858	10.58	19.30			33.40						
77 11 166 859	.32	40.00	77 11 166 914	131.45	31.40						
77 11 166 860	216.54	37.02			33.40						
77 11 166 861	7.80	37.02	77 11 166 915	47.01	31.40						
77 11 166 862	3.42	37.02			33.40						
77 11 166 863	1.96	37.02	77 11 166 916	1.48	31.40						
77 11 166 864	.24	13.50			33.40						
		40.10	77 11 166 917	42.19	31.40						
77 11 166 866	.33	19.50			33.40						
77 11 166 867	.09	13.50	77 11 166 918	32.92	37.80						